一、Mechanical Dimensions

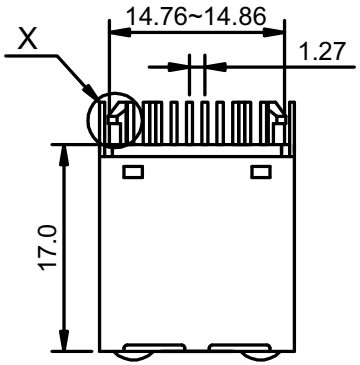

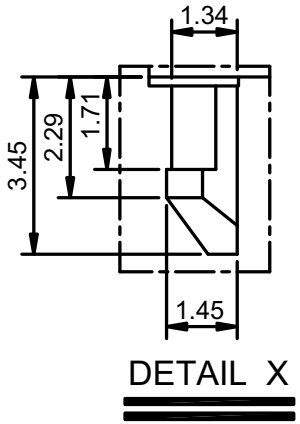

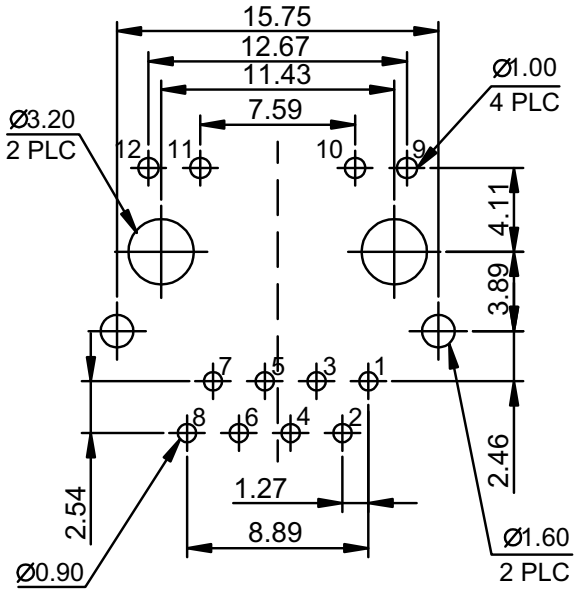

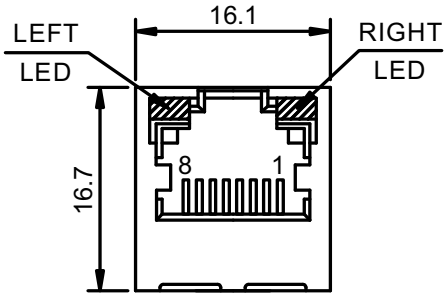

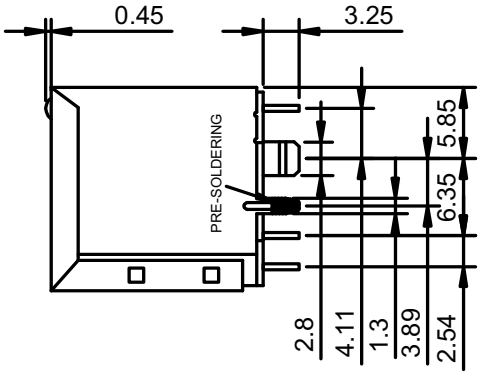

Unit：mm Unless otherwise specified, all tolerances are ± 0.25

RoHS Compliant

MORETHANALL
PCB CONNECTORS
Cable ASSEMBLIES
煜倫股份有限公司
www.morethanall.com

DRAWING BY CY		TOLERANCES ARE
CHECKED BY GENIUS		X. ±
UNIT / mm	SCALE 1 : 1	.X ±
		.XX ±
		.XXX ±
DATE		ANG ±
SIZE A4	PPOJECTION	

照片框

ORDER INFORMATION

MJDF17T45H-KX06B38GY-0808

- SERIES
- BLACK
- NON EAR
- 06u" GOLD
- REAR TAB 3.89mm
- GREEN / YELLOW
- 8P8C

DESCRIPTION: 180° Rj45 10/100 Base-T Jack With Magnetic Module

二、Schematics

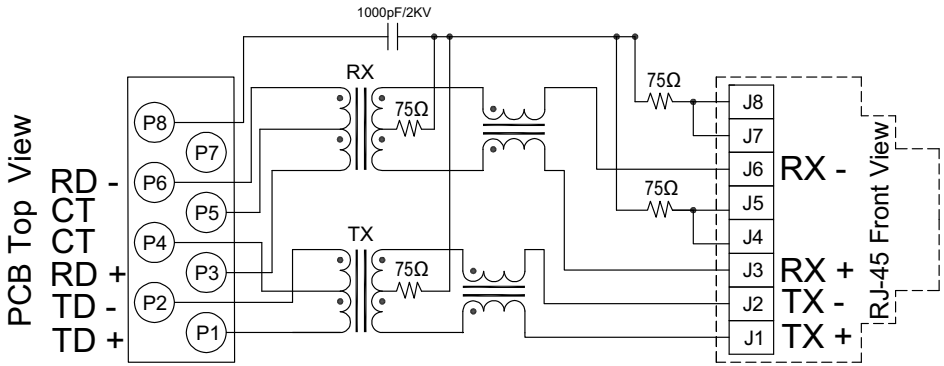

三、ELECTRICAL SPECFICATIONS@25 ℃:

1. Turns Ratio(±3%): 1CT:1CT
2. OCL(100KHz/0.1V@8mA):350uH MIN
3. Insertion Loss (dB MAX): -1.0dB(0.3-100MHz)
4. Return Loss(dB MIN): -18dB(1-30MHz);-16dB(40MHz);-12dB(50MHz);
   -10dB(60-80MHz)
5. Crosstalk (dB MIN): -40dB(30MHz);-35dB(60MHz);-30dB(100MHz)
6. CMR(dB MIN): -30dB(30MHz);-20dB(60MHz);-20dB(100MHz)
7. HI-POT(Pri to Sec): 1500Vrms/0.5mA/60Sec or 1650Vrms/0.5mA/2Sec
8. Operating Temperature: 0℃～+70℃
9. RoHS compliance:YES

Standard LED	Wavelength	Forward*V(MAX)	TYP
Green	565nm	2.5v	2.2v
Yellow	585nm	2.5v	2.1v

With a forward current of 20mA

RoHS Compliant

MORETHANALL PCB CONNECTORS Cable ASSEMBLIES
煜倫股份有限公司
www.morethanall.com

DRAWING BY CY		TOLERANCES ARE
CHECKED BY GENIUS		X. ±
UNIT / mm	SCALE 1 : 1	.X ±
		.XX ±
		.XXX ±
DATE		ANG ±
SIZE A4	PPOJECTION	

照片框

ORDER INFORMATION

MJDF17T45H-KX06B38GY-0808

- SERIES
- BLACK
- NON EAR
- 06u" GOLD
- REAR TAB 3.89mm
- GREEN / YELLOW
- 8P8C

DESCRIPTION: 180° Rj45 10/100 Base-T Jack With Magnetic Module

四、Mechanicals

Housing Material:

MATERIAL:NYLON 66 UL94V-0 STANDARD COLOR:BLACK

Insert Material:

MATERIAL:Phos–Bronze C5210 EH---0.35mm Thickness

Insert –PBT GF UL94V-0

1.PLATING(1) NICKEL

2.PLATING(2) 100%Sn

3.PLATING(3) GOLD (3u " ～50u ")

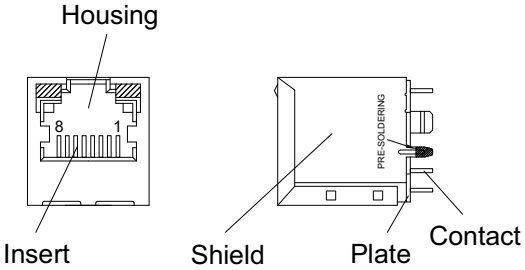

Contact pin Material:

MATERIAL: Phos–Bronze C5191---0.35mm Thickness

1.PLATING(1) NICKEL

2.PLATING(2) 100%Sn

Shielding Material:

BRASS C2680 PLATING NICKEL

Operating Life:750 Cycles MIN.

五、Environmental

1.Storage Temp:-40℃TO +85℃.

2.Operating Temp: 0℃TO +70℃

3.MATES WITH MODULAR PLUG CONFORMING TO FCC PART 68 ,SUBPARTF.

六、Packaging

1. packaging unit : 60 PCS/tray
2. packaging material : PET

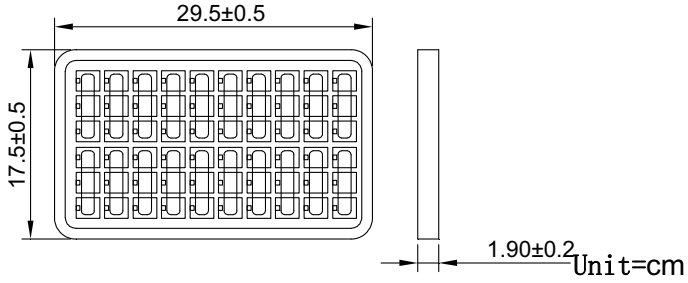

3. outer carton unit 1320 pcs/ 22 Trays/box

4. Weight: 11.86kg percarton

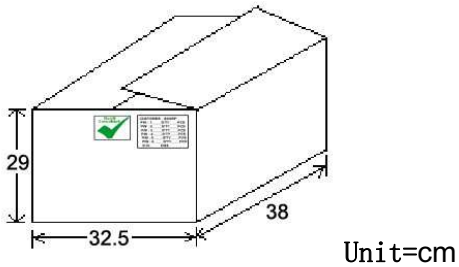

RoHS Compliant

MORETHANALL PCB CONNECTORS Cable ASSEMBLIES

煜倫股份有限公司

www.morethanall.com

DRAWING BY CY		TOLERANCES ARE
CHECKED BY GENIUS		X. ±
UNIT / mm	SCALE 1 : 1	.X ±
		.XX ±
		.XXX ±
DATE		ANG ±
SIZE A4	PPOJECTION	

照片框

ORDER INFORMATION

MJDF17T45H-KX06B38GY-0808

SERIES

8P8C

GREEN / YELLOW

REAR TAB 3.89mm

06u" GOLD

NON EAR

BLACK

DESCRIPTION: 180° Rj45 10/100 Base-T Jack With Magnetic Module