MATERIAL:
- HOUSING-PBT POLYESTER UL94V-0
  MIXED GLASS FIBER.
  STANDARD COLOR-GRAY
- CONTACTS-0.45mm DIAMETER PHOS-BRONZE
  PLATED WITH HARD GOLD

CAVITY CONFIRMS TO FCC RULES AND REGULATIONS
PART 68,SUBPART F.

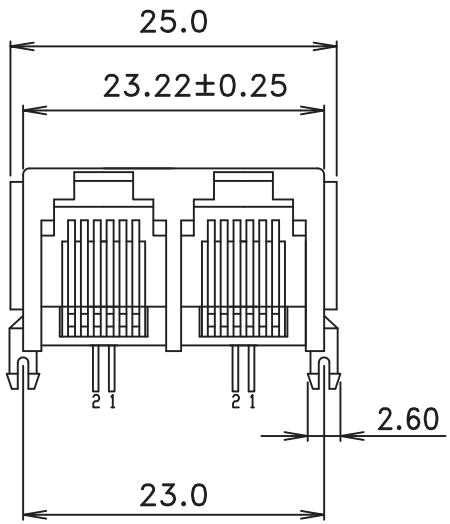

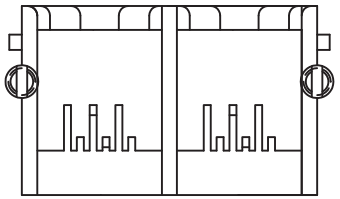

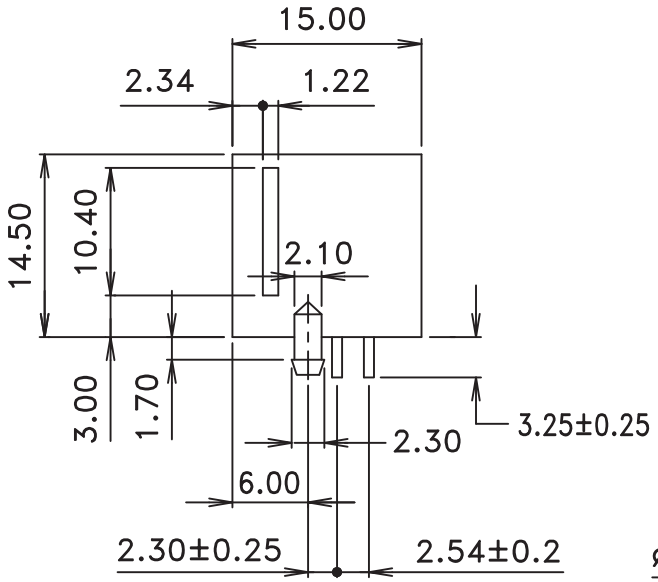

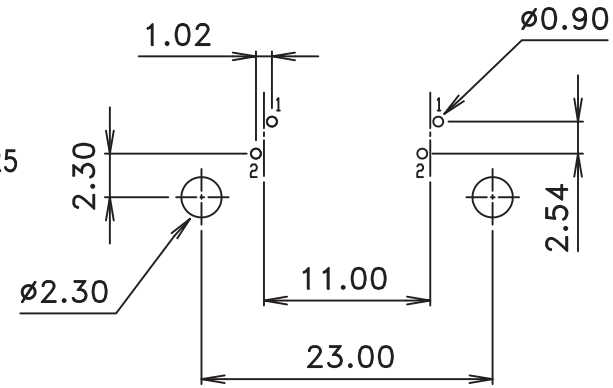

PC Board Layout
Ref.

RoHS Compliant

MORETHANALL
PCB CONNECTORS
Cable ASSEMBLIES
煜倫股份有限公司
www.morethanall.com

DRAWING BY CY		TOLERANCES ARE
CHECKED BY GENIUS		X. ± .X ± 0.25 .XX ± 0.13 .XXX ± 0.05 ANG ±
UNIT / mm	SCALE 1 : 1	
DATE		
SIZE A4	PPOJECTION	

照片框

ORDER INFORMATION

MJ14A2-KE06-0602-LF

- SERIES
- EAR
- BLACK
- 06u"GOLD
- 6P2C
- LEADFREE

DESCRIPTION: RJ11, FLANGED TWIN TYPE PCB LOW PROFILE JACK