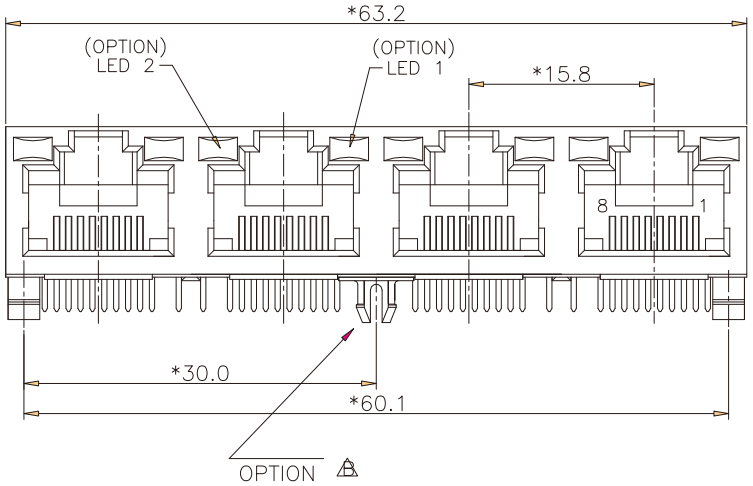

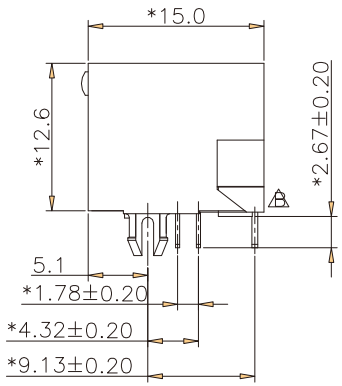

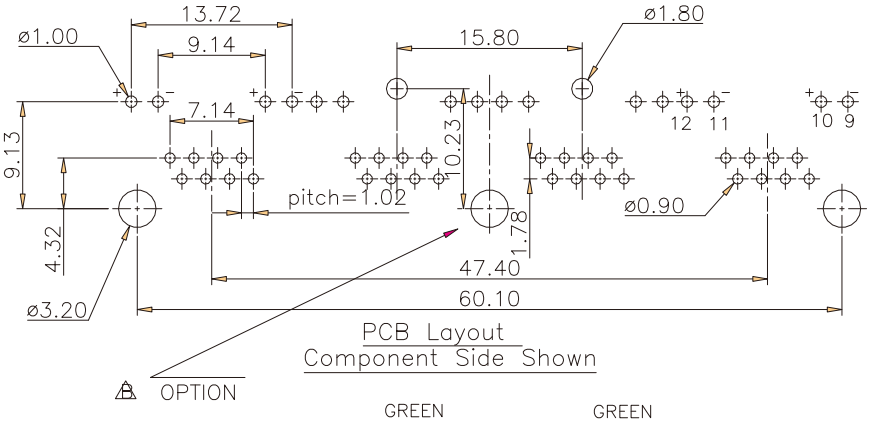

PCB Layout
Component Side Shown

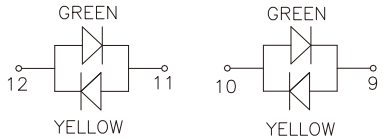

NOTES:

ELECTRICAL:

1. VOLTAGE RATING : 125 VAC RMS.
2. CURRENT RATING : 1.5 AMP.
3. CONTACT RESISTANCE : 30 MILLIOHMS MAX.
4. INSULATION RESISTANCE: 1000 MEGOHMS MIN. @ 500 VDC.
5. DIELECTRIC STRENGTH : 1000 VAC RMS 60Hz, 1MIN.
6. LED RATINGS: FORWARD VOLTAGE: 2.2 VOLTS TYPICAL.
   REVERSE VOLTAGE: 5 VOLTS MAXIMUM.
7. OPERATING: 750 CYCLES MIN.

MECHANICAL:

1. HOUSING MATERIAL : HIGH TEMP&POLYESTER. UL94V-0 .
2. INSERT MATERIAL : GLASS FILLED POLYESTER UL94V-0 BK.
3. BACK PLATE MATERIAL : GLASS FILLED POLYESTER UL94V-0 BK.
4. LED SIZE : 3.05*1.85*7.0, P=2.54mm.
5. CONTACT MATERIAL : PHOSPHOR BRONZE 0.35mm THICKNESS
6. PLATING : GOLD PLATING OVER NICKEL.
7. PCB RETENTION PRE-SOLDER : 1 LB MIN.
8. PCB RETENTION POST-SOLDER : 10 LBS MIN.

ENVIRONMENTAL:

1. STORAGE : -40°C TO +85°C.
2. OPERATION : -40°C TO +85°C.
3. WAVE SOLDERING TEMPERATURE: 255~265°C (5~10 SECONDS)

MATES WITH MODULAR PLUG CONFORMING TO
FCC PART 68, SUBPART F. 1-LED1:GREEN,LED2:YELLOW HIGH TEMP W/O LOGO

RoHS Compliant

MORETHANALL PCB CONNECTORS Cable ASSEMBLIES
煜倫股份有限公司
www.morethanall.com

DRAWING BY CY		TOLERANCES ARE
CHECKED BY GENIUS		X. ±
UNIT / mm	SCALE 1 : 1	.X ±
		.XX ±
DATE		.XXX ±
		ANG ±
SIZE A4	PPOJECTION	

照片框

ORDER INFORMATION

MJ13ULA4-KXxxGYGY-0808-LF

SERIES
BLACK | NON POST
03:03u"GOLD
06:06u"GOLD
GREEN,YELLOW / GREEN,YELLOW
8P8C
LEADFREE

DESCRIPTION: