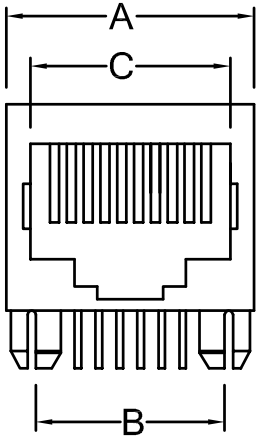

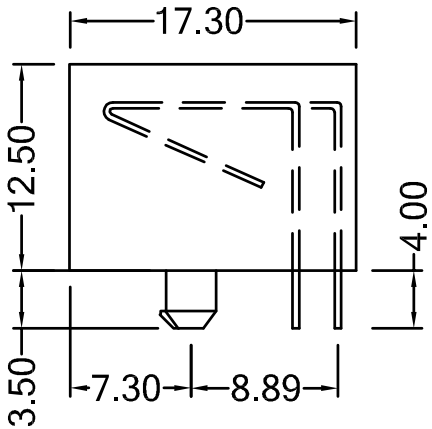

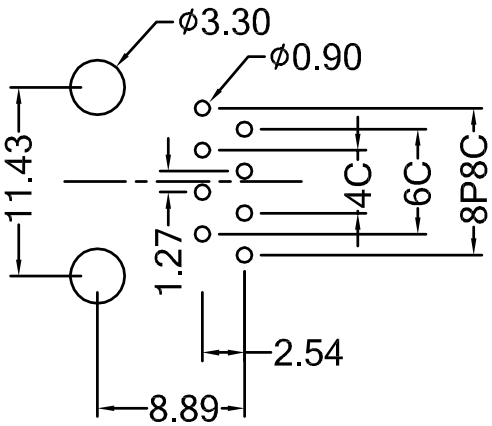

PCB LAYOUT / TOP VIEW

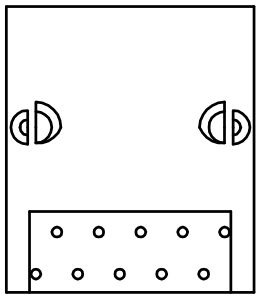

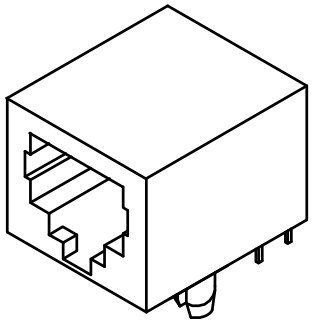

position	contact	A	B	C
8P	8C	15.00	11.43	11.90

MATERIAL & FINISH

Housing & Insert: PBT or Nylon 9T, UL94V-0, black

Contact: 0.35 mm thickness phosphor bronze,
Gold plated over nickel on contact area,
Tin plated over nickel on solder area.

Temperature: -40°C to 85°C

Mating Cycle: 750 min.

ELECTRICAL SPECIFICATIONS

Voltage: 125 VAC

Current: 1.5 A

Contact Resistance: 30 milliohms max.

Insulation Resistance: 500 megaohms min.

Dielectric Withstanding Voltage: 1000 VAC

RoHS Compliant

MORETHANALL PCB CONNECTORS Cable ASSEMBLIES

煜倫股份有限公司

www.morethanall.com

DRAWING BY CY		TOLERANCES ARE
CHECKED BY GENIUS		X. ±
UNIT / mm	SCALE 1 : 1	.X ±
		.XX ±
DATE		.XXX ±
		ANG ±
SIZE A4	PPOJECTION	

照片框

ORDER INFORMATION

MJ14S-KXxxT3-0808-LF

SERIES

BLACK
NON EAR

0.35t
03:03u"GOLD
06:06u"GOLD
15:15u"GOLD

8P8C

LEADFREE

DESCRIPTION: