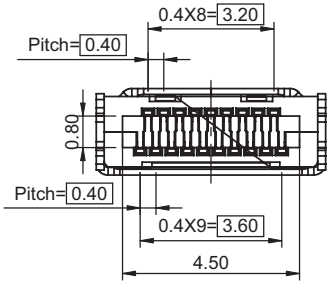

HDMI Each Signal Terminal
Will Be Functional After Detected.
Pin Assignment

NOTES :
1.Material :
Housing : High temperature thermoplastic,UL94-V0.
Color : Black
HDMI Terminal : Copper Alloy.
Cover : Copper Alloy.
2.Finish :
Cover :G/F

[illegible]	[illegible]	[illegible]	[illegible]	[illegible]	[illegible]	[illegible]	[illegible]	[illegible]	[illegible]	[illegible]
[illegible]	[illegible]	[illegible]	[illegible]	[illegible]	[illegible]	[illegible]	[illegible]	[illegible]	[illegible]	[illegible]
[illegible]	[illegible]	[illegible]	[illegible]	[illegible]	[illegible]	[illegible]	[illegible]	[illegible]	[illegible]	[illegible]

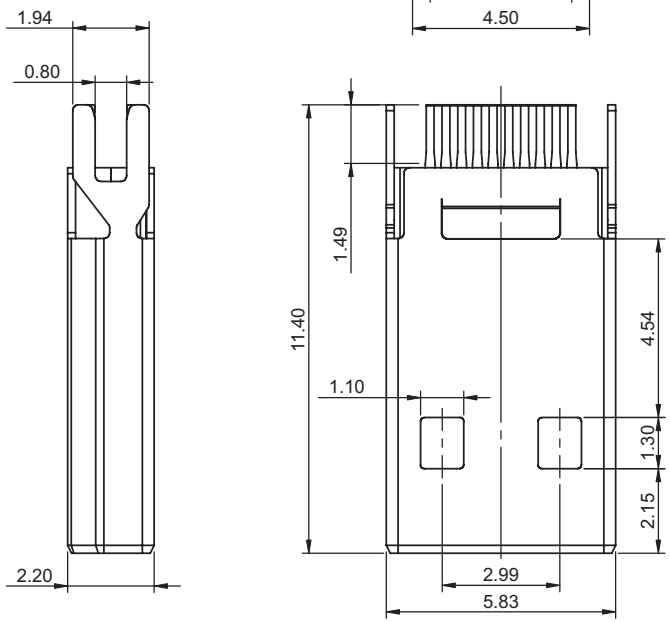

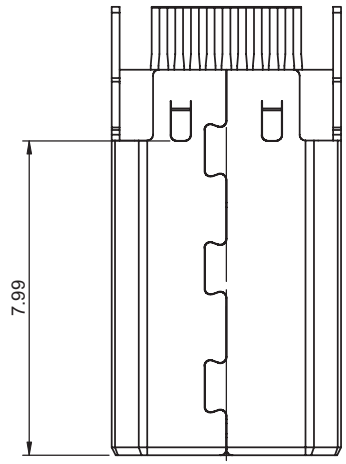

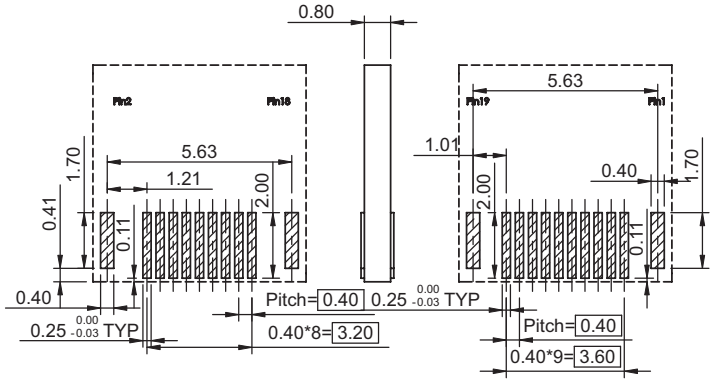

PCB Layout

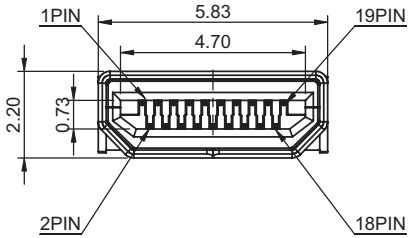

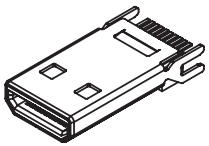

RoHS Compliant

MORETHANALL
PCB CONNECTORS
Cable ASSEMBLIES
煜倫股份有限公司
www.morethanall.com

DRAWING BY CY	
CHECKED BY GENIUS	
UNIT / mm	SCALE 1 : 1
DATE	
SIZE A4	PPOJECTION

TOLERANCES ARE
X. ± 0.40
.X ± 0.30
.XX ± 0.20
.XXX ± 0.10
ANG ±

照片框

ORDER INFORMATION

MIHDMI-PE08-19-LF
SERIES
MALE
EDGE CLIP 0.8mm
19WAY
LEADFREE

DESCRIPTION: HDMI TYPE D PLUG CONNECTOR