P/N	NUMBER OF PINS	A	B	C	D	E	F	G
MID-PRNJ-09	9	19.93	14.35	5.08	14.35	10.41	14.35	8.30
MID-PRNJ-15	15	23.75	18.16	8.89	18.16	14.22	18.16	12.20
MID-PRNJ-25	25	30.10	24.51	15.23	24.51	20.57	24.51	18.55

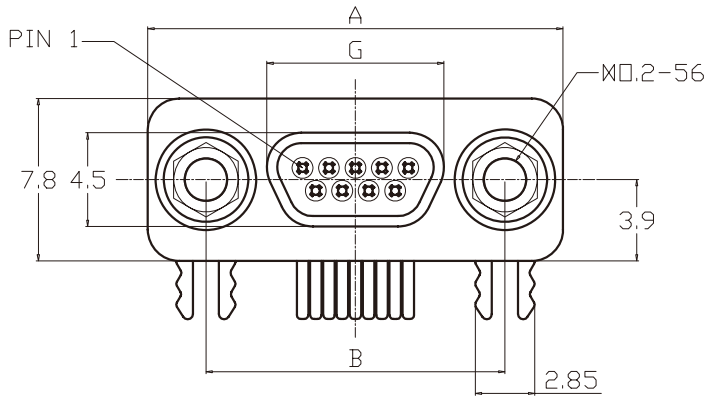

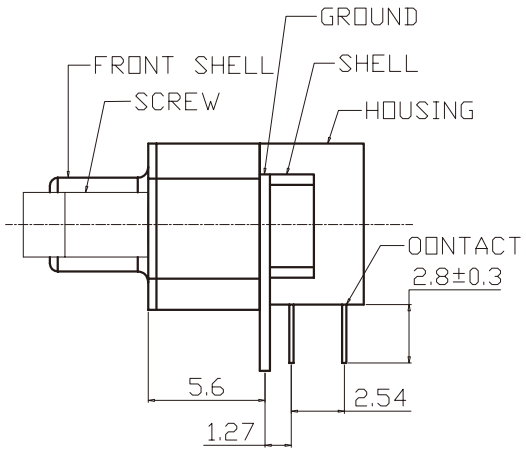

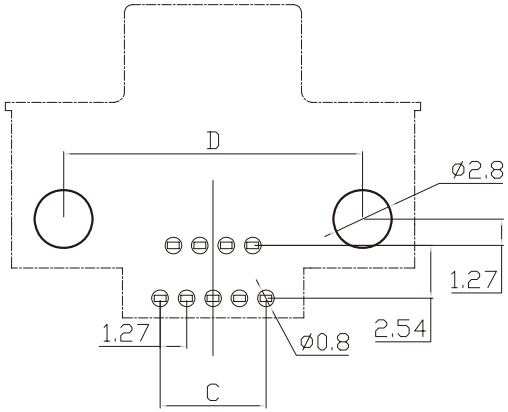

P.C.B LAYOUT

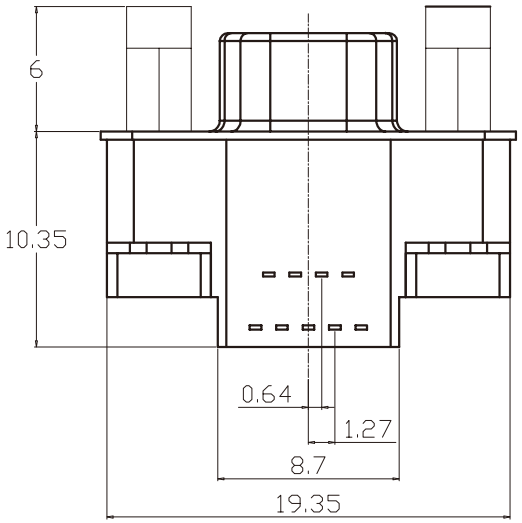

1. MATERIAL :
   1-1. HOUSING : LCP UL94V-0 ; COLOR : BLACK
   1-2. CONTACT : PHOSPHOR BRONZE
   1-3. FRONT SHELL : SPCC
   1-4. SHELL : BRASS
   1-5. GROUND : BRASS
   1-6. SCREW : BRASS
2. FINISH :
   2-1. CONTACT : GOLD 15u" ON CONTACT AERA
   MATTE TIN 60u" ON SOLDER AERA
   2-2. FRONT SHELL : NICKEL PLATED 60u" ~ 100u" OVER ALL
   2-3. SHELL : NICKEL PLATED 60u" ~ 100u" OVER ALL
   2-4. GROUND : NICKEL PLATED 60u" ~ 100u" OVER ALL
   2-5. SCREW : NICKEL PLATED 60u" ~ 100u" OVER ALL
3. ELECTRICAL SPECIFICATION :
   3-1. Rated current : 1A at 25⊥/77℉, 0.7A at 70⊥/158℉
   3-2. Voltage : 350Vac
4. Environmental :
   4-1. Operation Temperature : -40⊥~+125⊥

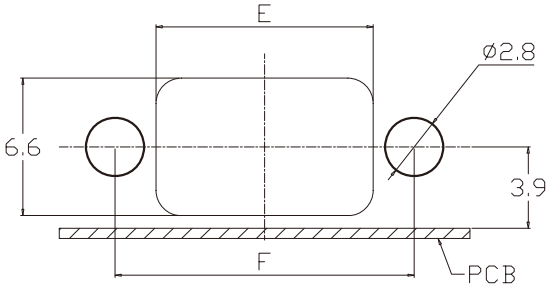

PANEL CUT-OUT

RoHS Compliant

MORETHANALL
PCB CONNECTORS
Cable ASSEMBLIES
煜倫股份有限公司
www.morethanall.com

DRAWING BY CY	
CHECKED BY GENIUS	
UNIT / mm	SCALE 1 : 1
DATE	
SIZE A4	PPOJECTION

TOLERANCES ARE
X. ±
.X ± 0.20
.XX ± 0.15
.XXX ± 0.10
ANG ±

照片框

ORDER INFORMATION

MID-PRNJ-xx-LF
- SERIES
- MALE
- DIP 90°
- NUT
- JACKSCREW
- 09~25 WAY
- LEADFREE

DESCRIPTION: