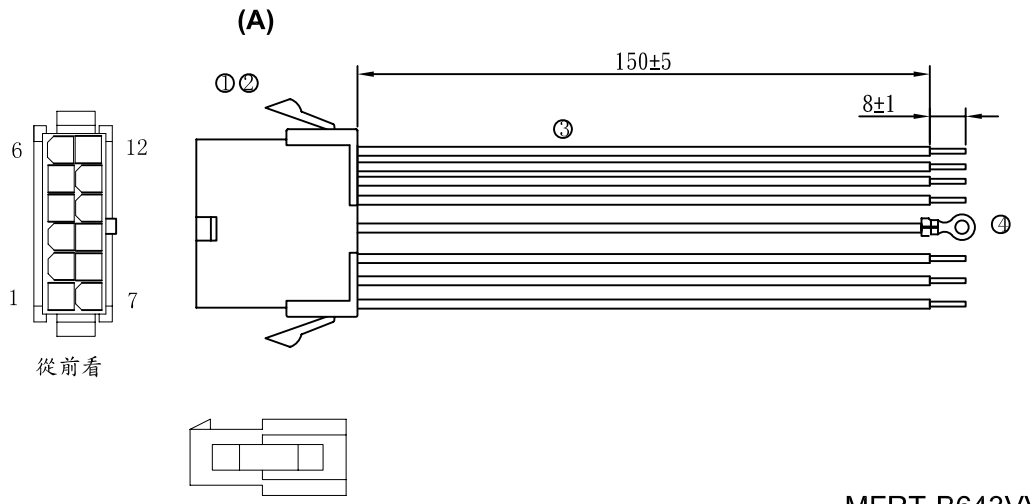

MFRT-B643VVK-M15C-LF

LEADFREE

RoHS Compliant

注意:尾端剝皮后不鍍錫

CONN.	
(A)	WIRE
1	VIOLET L=170(3.5x8)
2	VIOLET L=170(3.5x8)
3	BLACK L=170(3.5x8)
4	RED L=170(3.5x8)
5	WHITE L=170(3.5x8)
6	WHITE L=170(3.5x8)
7	BLUE L=170(3.5x8)
8	BLUE L=170(3.5x8)
9	GR/YE L=170(3.5x5)
10	NC.
11	VIOLET L=170(3.5x8)
12	VIOLET L=170(3.5x8)

ITEM	PART NO	Q'TY	DESCRIPTION	VENDOR
01	H.S.G	1	5015H-12(2x6)	ECI or EQ.
02	TER	11	5015T1	ECI or EQ.
03	WIRE	4	UL1007 20AWG 單股裸銅導體VIOLET L=170 (3.5x8)	不指定
	WIRE	1	UL1007 20AWG 單股裸銅導體 BLACK L=170 (3.5x8)	不指定
	WIRE	1	UL1007 20AWG 單股裸銅導體 RED L=170(3.5x8)	不指定
	WIRE	2	UL1007 20AWG 單股裸銅導體 WHITE L=170 (3.5x8)	不指定
	WIRE	2	UL1007 20AWG 單股裸銅導體 BLUE L=170 (3.5x8)	不指定
	WIRE	1	UL1007 20AWG 單股裸銅導體 GR/YE L=170 (3.5x5)	不指定
04	TER	1	E441BS-2	ECI or EQ.

MORETHANALL CONNECTORS ASSEMBLIES

煜倫股份有限公司

PART NO. MFRT-B643VVK-M15C					
DWG NO. MFRT-B643VVK-M15C	CHECKED BY CY	TOLERANCES ARE .X ± 0.2 .XX ± .XXX ± AWG	DESCRIP TION:	WIRE HAMESS	
FILE NO.	DRAWING BY				
UNIT / mm	SCALE 1 : 1	PROJECTION	AREA	REVISIONS	HK	DATE