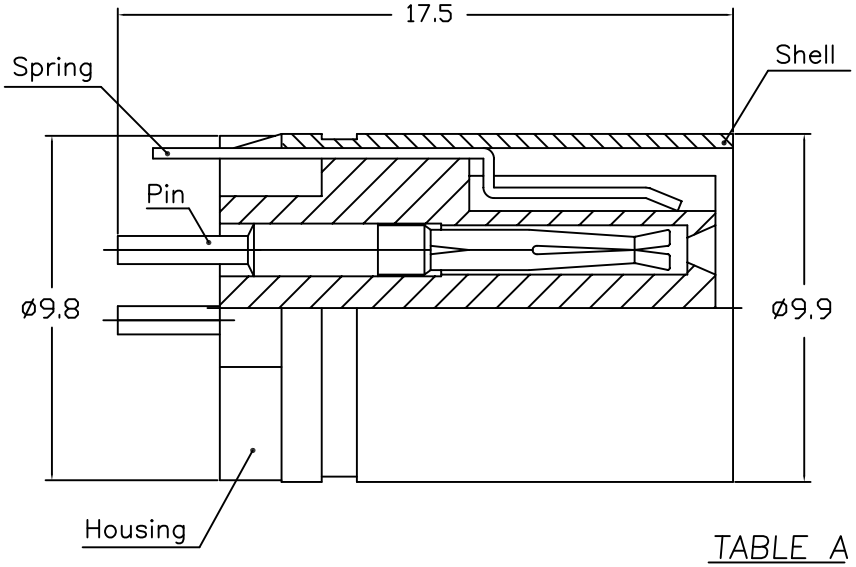

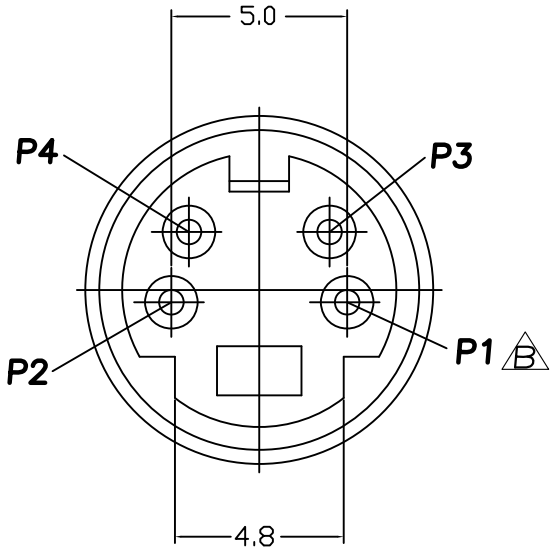

備註 /NOTE:

1.安規 /SAFETY:
- 1-1.規格 /RATING: 100V AC MAX or 12V DC 2A MAX
- 1-2.絶緣阻抗 /INSULATION RESISTANCE: 50M Ω MIN at 250V DC
- 1-3.絶緣耐壓 /WITHSTANDING: 250V AC at 1 MINUTE

2.材質/MATERIAL:
- 2-1.膠芯 /HOUSING: PBT (黑色 /BLACK)
- 2-2.針/PIN: 黃銅 /BRASS
- 2-3.銅管 /SHELL: 黃銅 /BRASS
- 2-4.彈片 /SPRING: 燐銅 /PHOSPHOR BRONZE

3.電鍍 /PLATING:
- 3-1.針 /PIN: SEE TABLE A
- 3-2.銅管 /SHELL: 鎳 /NICKEL
- 3-3.彈片 /SPRING: 銀 /SILVER

4.拉拔力 /STRENGTH:
- 4-1.總合拉拔力 /PULL STRENGTH: 與公座拉拔力五次之後拉力為 1.0kgf~4.0kgf MIN

BOM	
4	CONTACT
1	SPRING
1	SHELL
1	HOUSING
數量	零 件

RoHS Compliant

MORETHANALL PCB CONNECTORS Cable ASSEMBLIES
煜倫股份有限公司
www.morethanall.com

DRAWING BY CY		TOLERANCES ARE
CHECKED BY GENIUS		X. ±
UNIT / mm	SCALE 1 : 1	.X ±
		.XX ±
DATE		.XXX ±
		ANG ±
SIZE A4	PPOJECTION	

照片框

ORDER INFORMATION

MDM-SE-04-LF
- SERIES
- FEMALE
- SPRING EAR
- 04 WAY
- LEADFREE

DESCRIPTION: MINI DIN 4PIN (F)