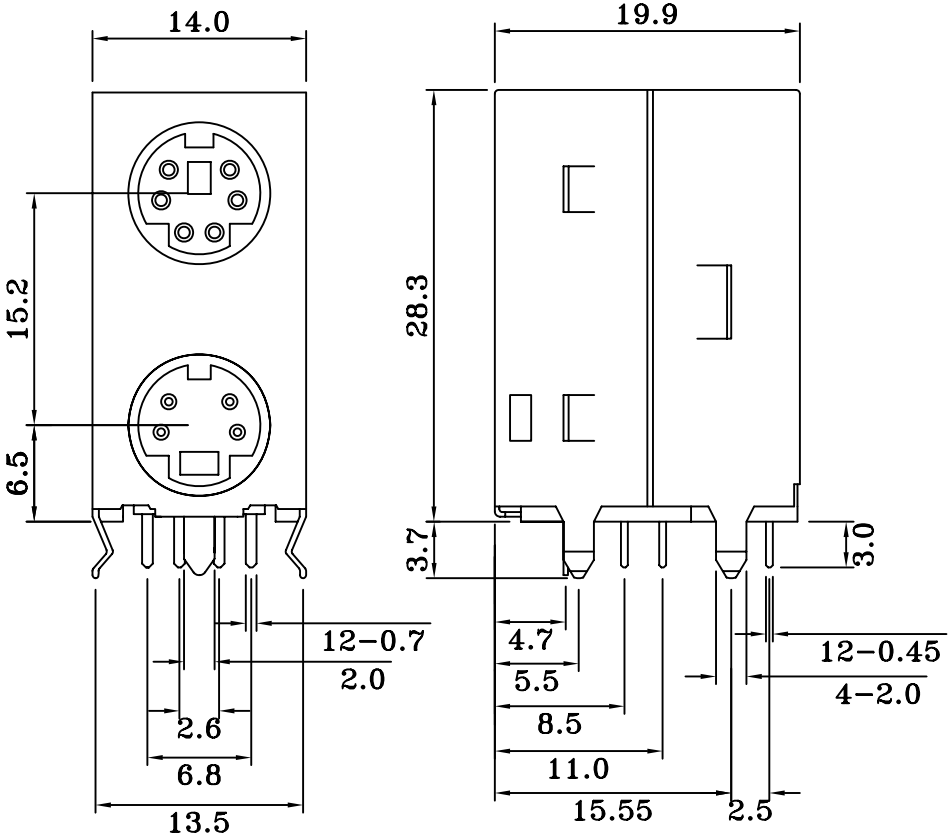

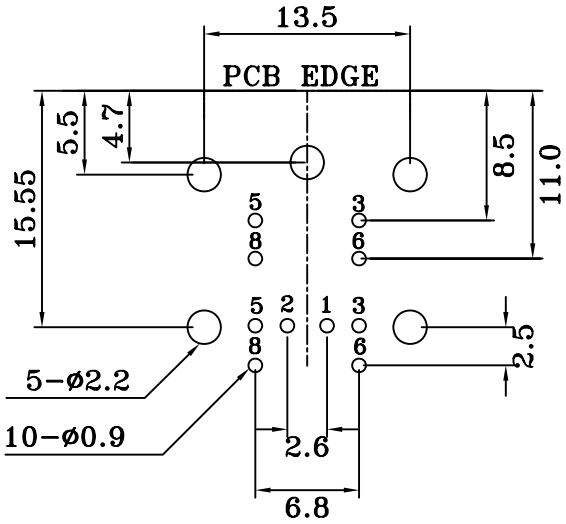

PCB LAYOUT
(BOTTOM VIEW)

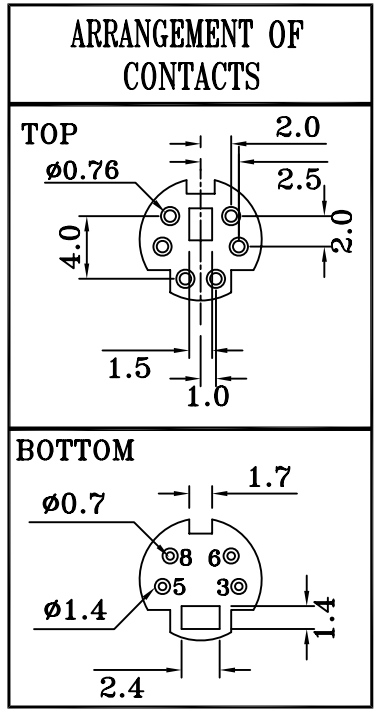

MDJB1-F-0604-LF
LEADFREE

RoHS Compliant

NO.	NAME	MATERIAL	FINISH	REMARK	Q'TY
1	TOP HOUSING	P.B.T.	BLACK		1
2	BOTTOM HOUSING	P.B.T.	BLACK		1
3	BACK COVER	P.B.T.	BLACK		1
4	CONTACT TERM.	PHOS. BRONZE	GOLD/TIN PLATED	Gold:1~3u"; NI:40~60u" ; TIN:120u" (100% pure Tin of lead free plating)	10
5	FRONT SHIELD	BRASS	TIN PLATED	TIN:3~5u	1
6	BACK SHIELD	BRASS	TIN PLATED	TIN:3~5u	1

MORETHANALL CONNECTORS ASSEMBLIES

煜倫股份有限公司

PART NO. MDJB1-F-0604					
DWG NO. MDJB1-F-0604	CHECKED BY CY	TOLERANCES ARE .X ± 0.2 .XX ± .XXX ± AWG	DESCRIP TION:	SHIELDED DOUBLE MINI DIN	
FILE NO.	DRAWING BY				
UNIT / mm SCALE 1 : 1	PROJECTION		AREA	REVISIONS HK	DATE