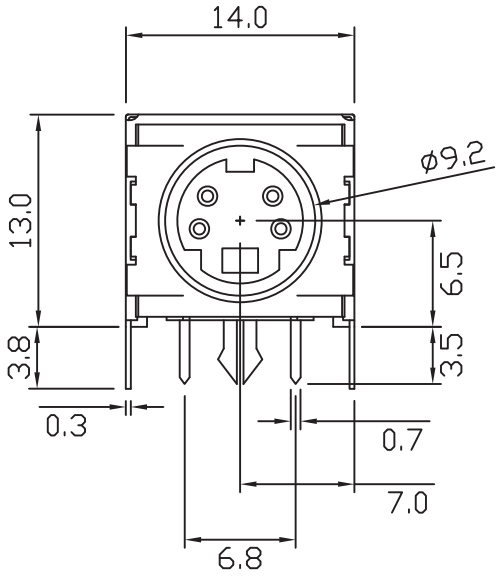

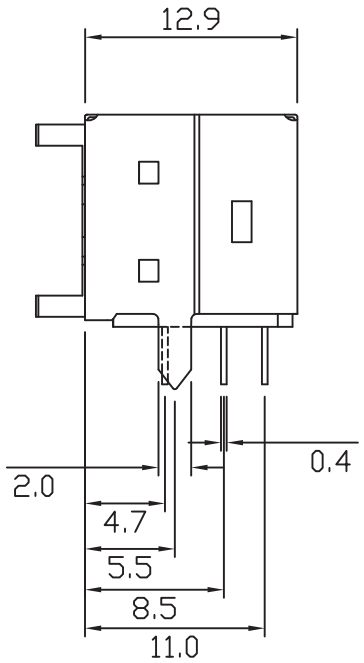

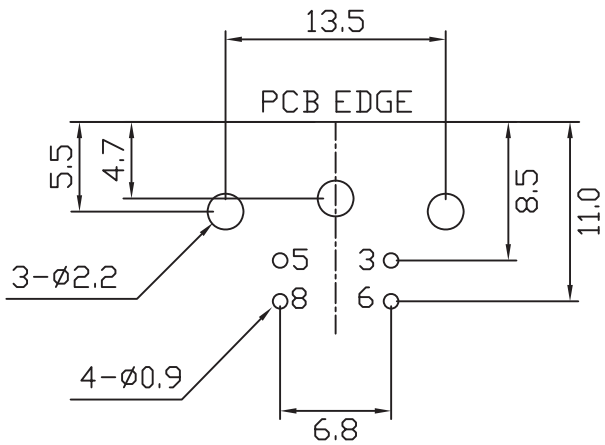

PCB LAYOUT
(BOTTOM VIEW)

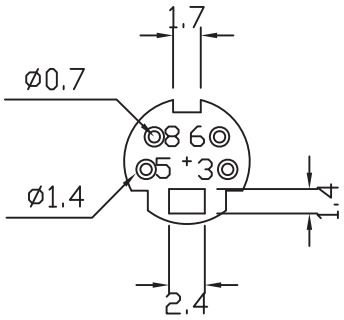

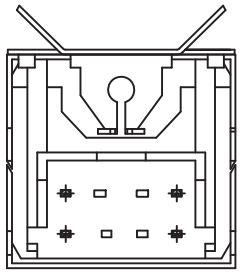

NO.	NAME	MATERIAL	FINISH	Q'TY	REMARK
1	HOUSING	PBT G.F.	BLACK	1	
2	CONTACT	PHOS. BRONZE T:0.2	GOLD-TIN PLATED	4	Gold:1~3u"; NI:40~60u"; TIN:120u" (100% pure Tin of lead free plating)
3	SHIELD	BRASS T:0.3	TIN PLATED	1	TIN:120~200u"
4	BOTTOM COVER	PBT G.F.	BLACK	1	
5	SPRING SHIELD	STAINLESS T:0.15		1	

RoHS Compliant

MORETHANALL
PCB CONNECTORS
Cable ASSEMBLIES
煜倫股份有限公司
www.morethanall.com

DRAWING BY CY
CHECKED BY GENIUS
UNIT / mm | SCALE 1 : 1
DATE
SIZE A4 | PPOJECTION

TOLERANCES ARE
X. ±
.X ±
.XX ±
.XXX ±
ANG ±

照片框

ORDER INFORMATION

MDJ-FS4-04-LF
SERIES
SPRING
FULL METAL
04 WAY
LEADFREE

DESCRIPTION: MINI DIN JACK