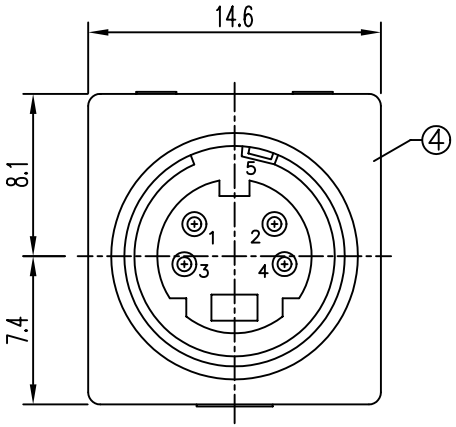

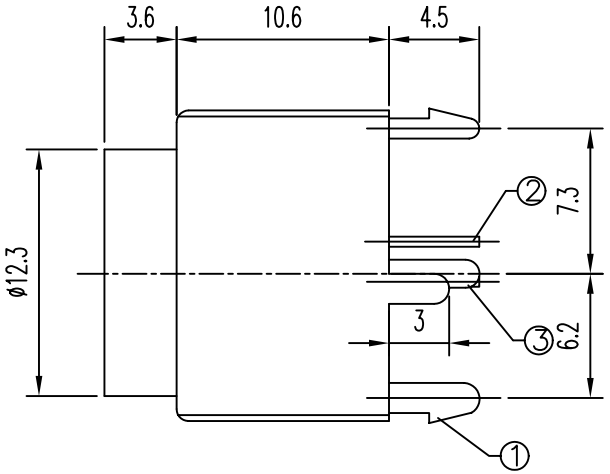

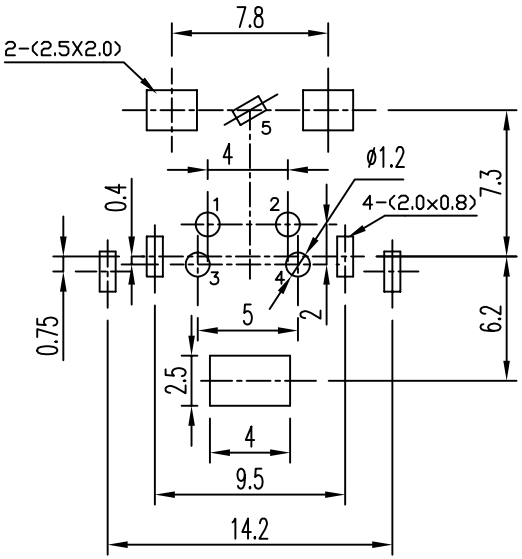

T:1.6 Dimensions of PC board holes

Tolerance : ±0.1(Printed-top view)

UNLESS OTHERWISE SPECIFIED, TOLERANCE ON DECIMAL: ±0.3

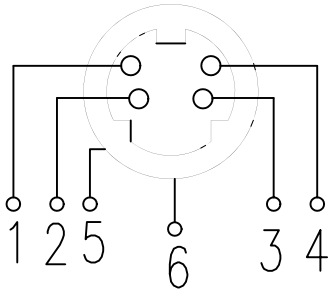

SCHEMATIC DIAGRAM

LTR	PART NAME	QTY	MATERIAL(THICK,COLOR)	REMARK
4	COAT	1	BRASS	MB:Cu Ni PLATED
3	CONTACT FOOT	1	BRONZE	MB:Cu Ni PLATED
2	CONTACT FOOT	5	BRONZE	MB:Cu Cu/Sn PLATED
1	HOUSING	1	PBT	

MORETHANALL CONNECTORS ASSEMBLIES

煜倫有限公司

PART NO. MDD-M-04			
DWG NO. MDD-M-04	CHECKED BY CY	TOLERANCES ARE .X ± 0.2 .XX ± .XXX ± AWG	DESCRIP TION: S JACK
FILE NO.	DRAWING BY		
UNIT / mm SCALE 1 : 1	PROJECTION		AREA / REVISIONS / HK / DATE