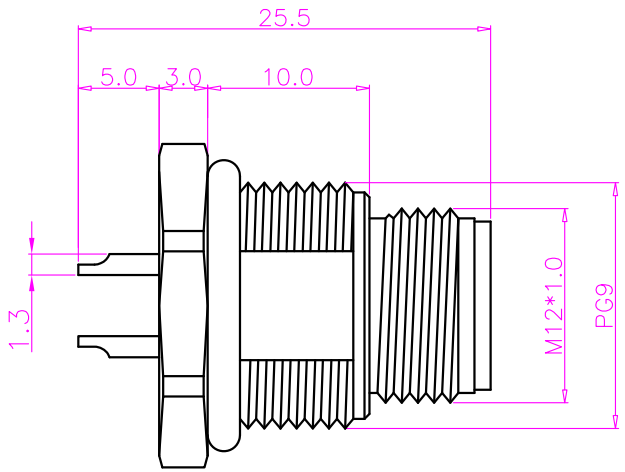

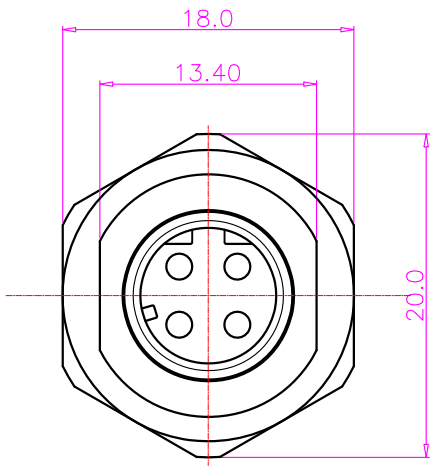

1. MATERIAL :
   1-1. HOUSING : PBT UL94V-0 ; COLOR : BLACK
   1-2. CONTACT : BRASS
   1-3. NUT : BRASS
   1-4. SHELL : BRASS
   1-5. O-RING : EPDM ; COLOR : BLACK
2. FINISH :
   2-1. CONTACT :
   UNDER PLATE : NICKEL
   2-2. NUT : NICKEL PLATED
   2-3. SHELL : NICKEL PLATED
3. ELECTRICAL SPECIFICATION :
   3-1. Rated current : 5A
   3-2. Rated Voltage :125V
   3-3. Water proof: IPX7
4. Environmental :
   4-1. Operation Temperature : -40℃~85℃

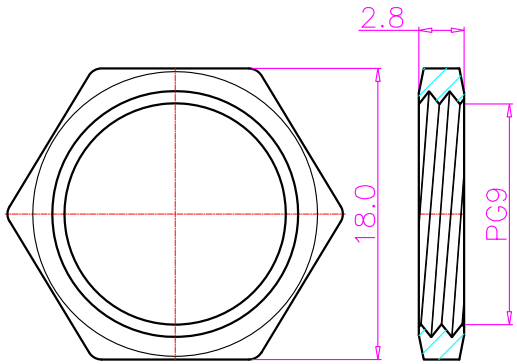

NUT

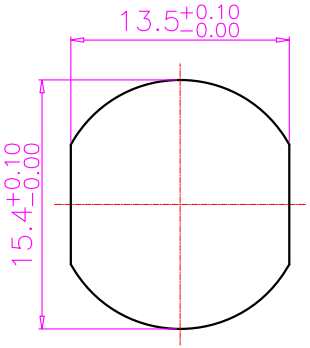

RECOMMEND PANEL CUT-OUT

RoHS Compliant

MORETHANALL
PCB CONNECTORS
Cable ASSEMBLIES
煜倫股份有限公司
www.morethanall.com

DRAWING BY CY		TOLERANCES ARE
CHECKED BY GENIUS		X. ±
UNIT / mm	SCALE 1 : 1	.X ± 0.20
DATE		.XX ± 0.10
		.XXX ± 0.05
		ANG ± 1°
SIZE A4	PPOJECTION	

照片框

ORDER INFORMATION

M12-PSPBNO15-04D-LF

- SERIES
- MALE
- SOLDER
- PANEL BACK
- NUT
- RING
- 15 DIA
- 04WAY
- D CODE
- LEADFREE

DESCRIPTION: 防水頭 M12 4pin D-Code (M) 前鎖 Pg9 焊線式