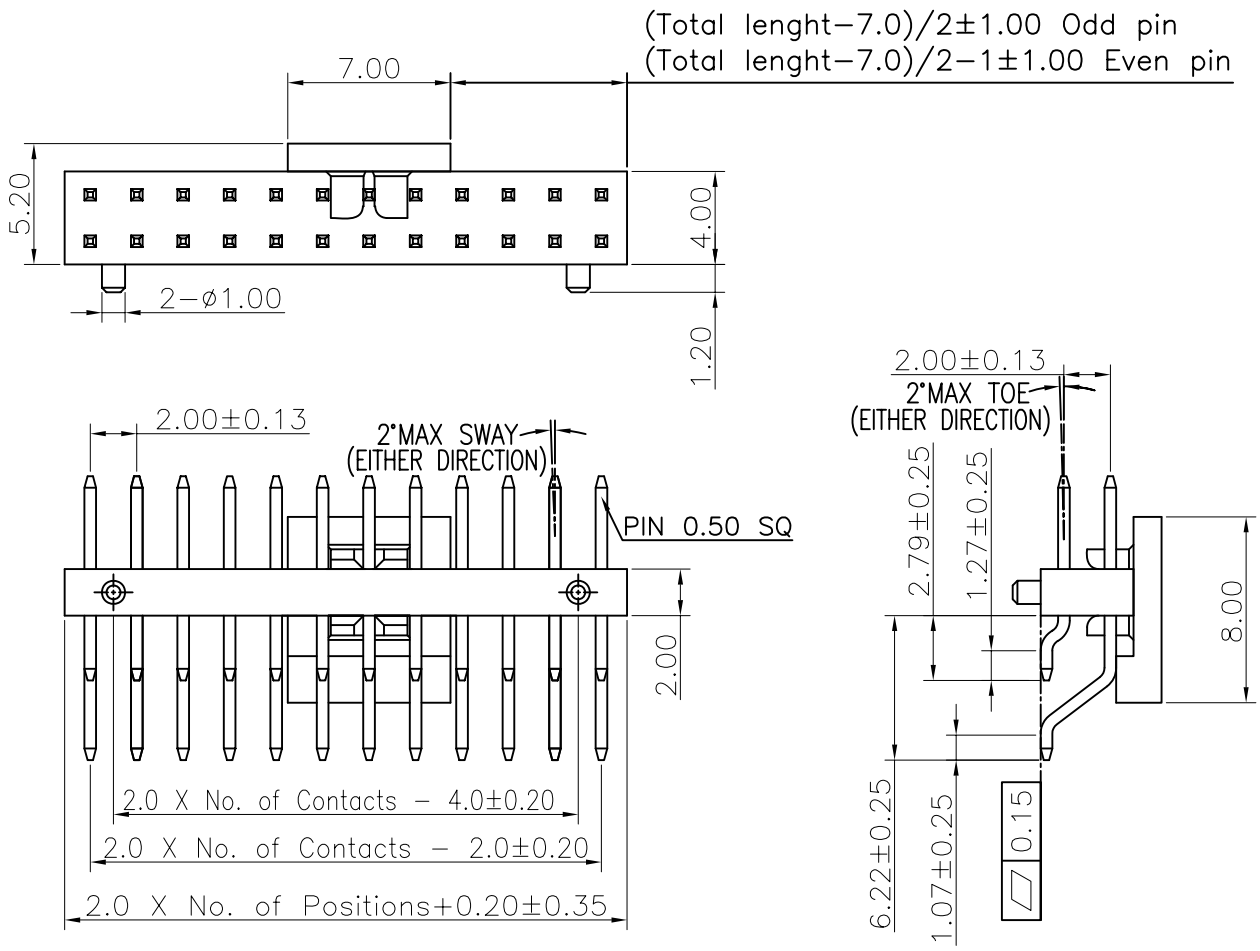

Specifications
Current Rating:2Amp
Insulation Resistance:1000MΩMin.
Dielectric Withstanding Voltage:500VAC
Contact Resistance:20mΩMax.
Operating Temperature:−40°C to +105°C
Materials
Contact Material:Phosphor Bronze
Insulator Material:High Temperature Thermoplastic, UL 94V−0 Nylon 9T or the equivalent material

Recommended P.C.Board Layout
(Tolerance:±0.05)

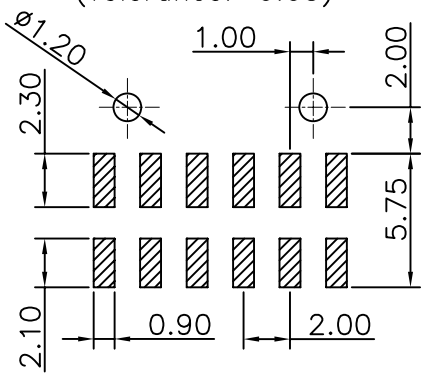

RoHS Compliant

MORETHANALL
PCB CONNECTORS
Cable ASSEMBLIES
煜倫股份有限公司
www.morethanall.com

DRAWING BY CY		TOLERANCES ARE
CHECKED BY GENIUS		X. ± 0.30 .X ± 0.25 .XX ± 0.15 .XXX ± 0.10 ANG ±
UNIT / mm	SCALE 1 : 1	
DATE		
SIZE A4	PPOJECTION	

照片框

ORDER INFORMATION

M-WPC-2Xxx-LF

SERIES
LEADFREE
2X03:06 WAY
2X30:60 WAY
CAP
POST
90°SMT

DESCRIPTION: 2.00 PIN HEADER DUAL ROWS SMT TYPE CONNECTOR