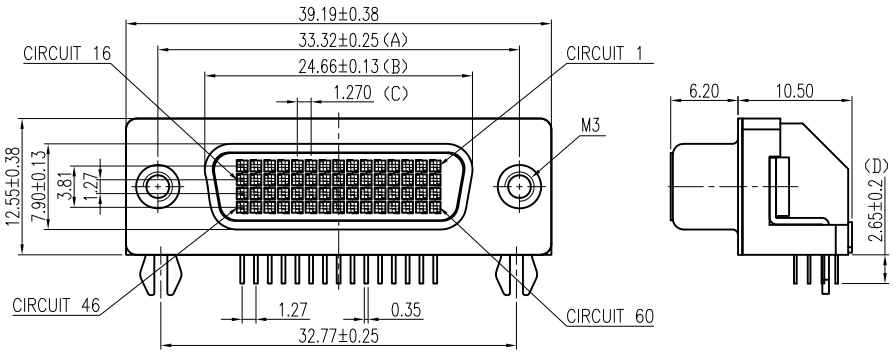

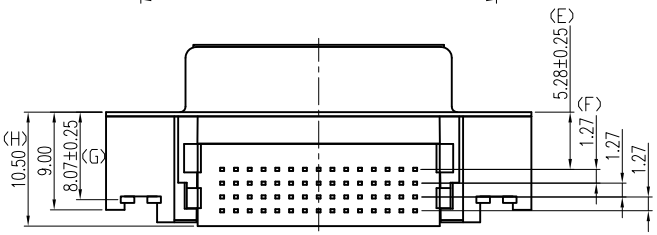

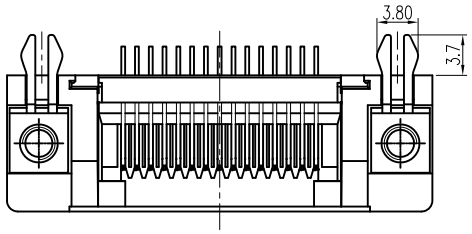

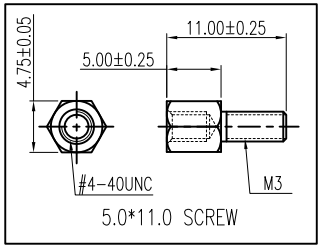

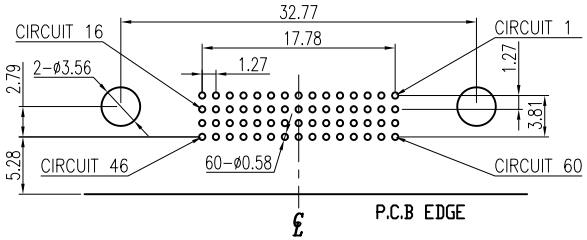

RECOMMENDED P.C.B LAYOUT

INSPECTION DIMENSION:(A)~(H)

SPECIFICATIONS

1.1 Voltage: 40 VAC(RMS)
1.2 Current Rating: 3 Ampere per Contact
1.3 Contact Resistance: 20 Milliohms Max.
1.4 Insulation Resistance: 500 Megohms Min.
1.5 Dielectric Withstanding Voltage: 500V DC(RMS)
1.6 Total Mating Force: 4.5 Kgf Max.
1.7 Total Unmating Force: 1.0 Kgf Min.
1.8 Durability: 500 cycles
1.9 Operating Temperature: −20°C to +80°C

NOTES

1. MATERIAL:
   Housing:LCP, UL 94V−0, Color:Black.
   Latch:LCP, UL 94V−0, Color:Black.
   Terminal:Copper Alloy.
   Shell:SPCC.
   Boardlock:Copper Alloy.
   Rivet:Copper Alloy.
   Screw:SPCC.
2. FINISH:
   Terminal:Gold Plated over Nickel at Contact Area.
   Shell:Nickel Plated.
   Boardlock:Tin Plated.
   Rivet:Nickel Plated.
   Screw:Nickel Plated.
3. This Product is LEAD−FREE & RoHS Compliance Product.

RoHS Compliant

MORETHANALL PCB CONNECTORS Cable ASSEMBLIES

煜倫股份有限公司

www.morethanall.com

DRAWING BY CY		TOLERANCES ARE
CHECKED BY GENIUS		X. ±
UNIT / mm	SCALE 1 : 1	.X ±
		.XX ± 0.25
DATE		.XXX ± 0.13
		ANG ± 2°
SIZE A4	PPOJECTION	

照片框

ORDER INFORMATION

LFH-SRNM3HBK-060-LF

SERIES
FEMALE
DIP 90°
NUT
M3
HEX SCREW
BLACK
60 WAY
LEADFREE

DESCRIPTION: 1.27mm PITCH LFH MATRIX 50, 60 CIRCUIT,RIGHT ANGLE