一般公差	
尺寸區分	公差
0>1.0	±0.1
1.0>6.0	±0.2
6.0>12.0	±0.3
12.0>25.0	±0.4
25.0>	±0.5

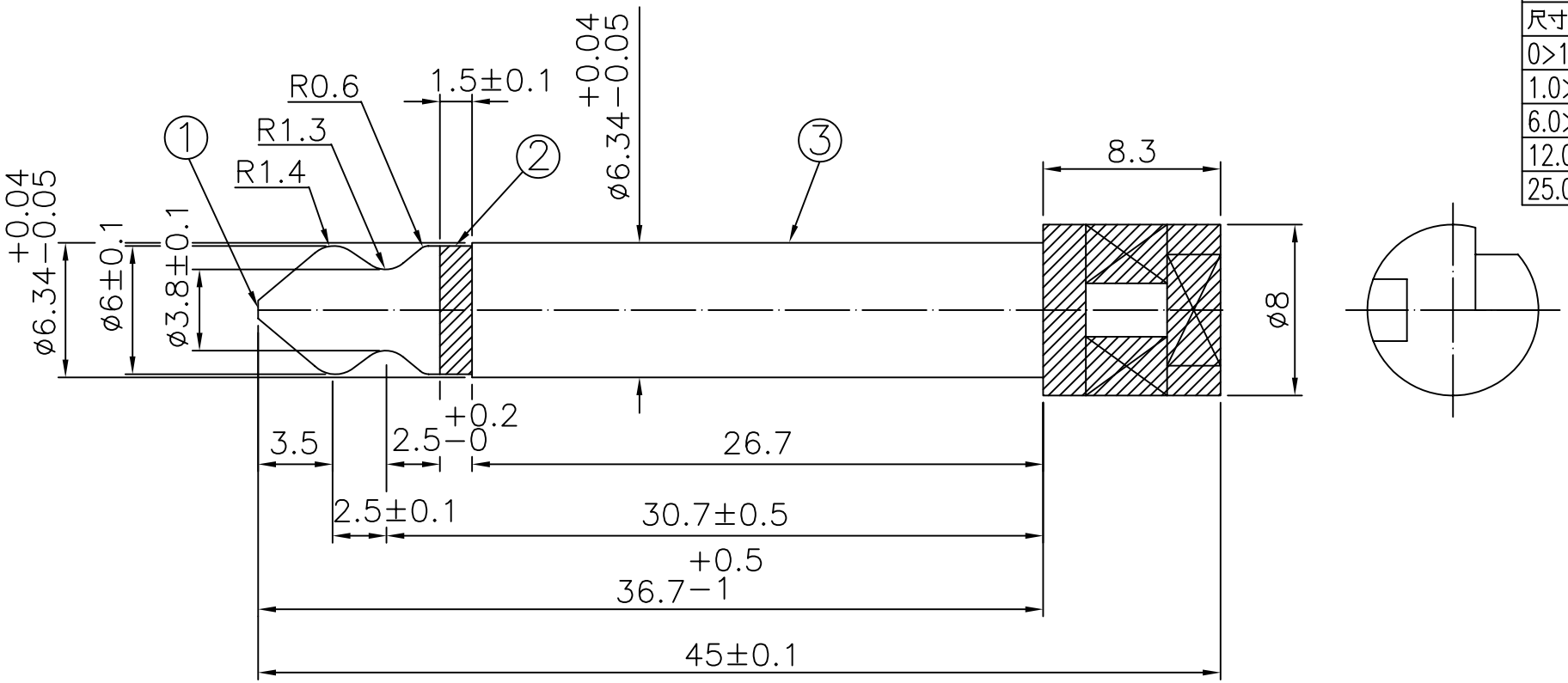

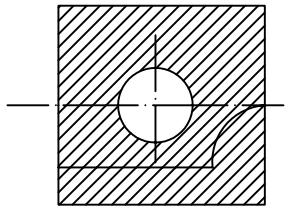

NO	CONTENT
3	BRASS NICKEL
2	ABS BLACK
1	BRASS NICKEL

RoHS Compliant

MORETHANALL
PCB CONNECTORS
Cable ASSEMBLIES
煜倫股份有限公司
www.morethanall.com

DRAWING BY CY		TOLERANCES ARE
CHECKED BY GENIUS		X. ±
UNIT / mm	SCALE 1 : 1	.X ±
		.XX ±
DATE		.XXX ±
		ANG ±
SIZE A4	PPOJECTION	

照片框

ORDER INFORMATION

HP-S-02T450-LF

SERIES
SOLDER
02WAY
LONG 45mm
LEADFREE

DESCRIPTION: *6.3mm MONO PLUG*45.0L*