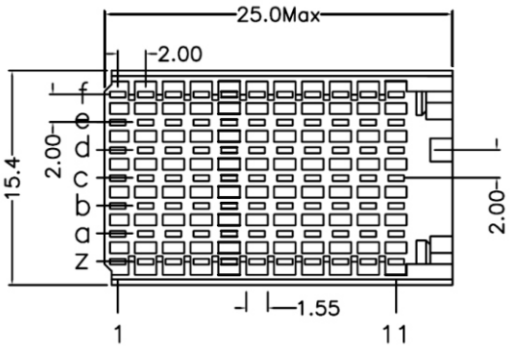

Material:

Housing: 30% Glass Filled PBT UL94V-0.
Contacts: Phosphor Bronze.

Electrical Characteristics:

Insulator Resistance: 1000M Ω min.
Contact Resistance: 20m Ω max.
Operating Temperature: -55°C~+125°C.

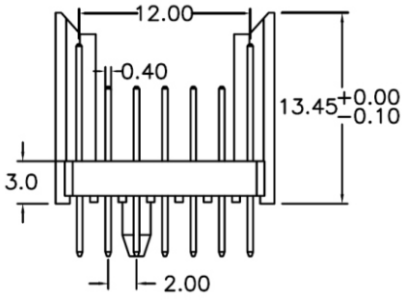

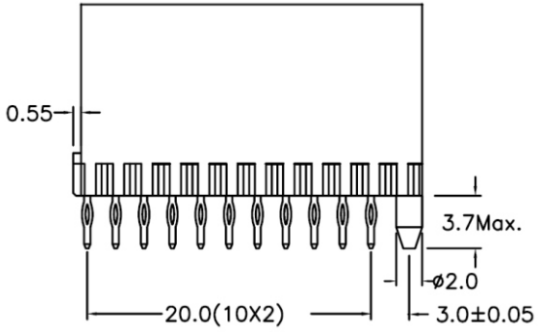

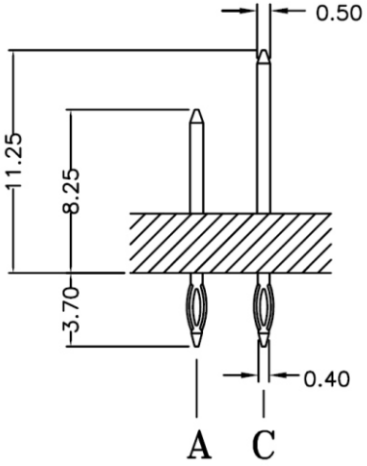

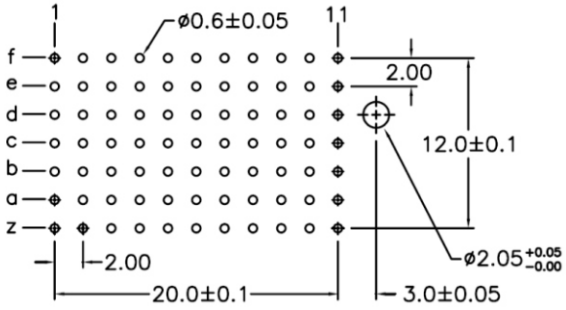

P.C. Board Layout
(Top View)

RoHS Compliant

MORETHANALL
PCB CONNECTORS
Cable ASSEMBLIES
煜倫股份有限公司
www.morethanall.com

DRAWING BY CY	
CHECKED BY GENIUS	
UNIT / mm	SCALE 1 : 1
DATE	
SIZE A4	PPOJECTION

TOLERANCES ARE
X. ±
.X ±
.XX ±
.XXX ±
ANG ±

照片框

ORDER INFORMATION

HM7C-PP-077-LF
SERIES
MALE
PRESS FIT
77 WAY
LEADFREE

DESCRIPTION: