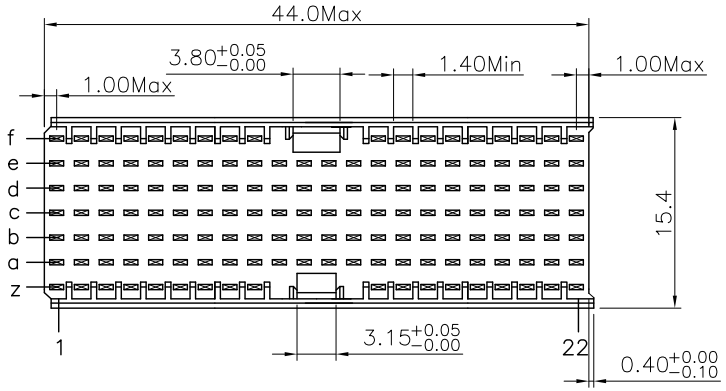

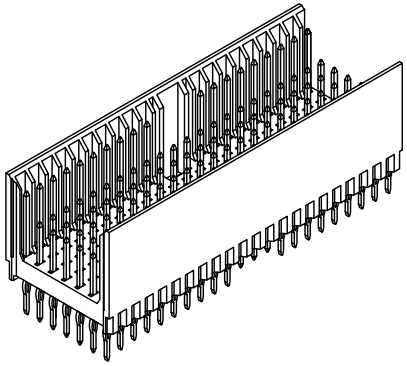

Material:

Housing: 30% Glass Filled PBT UL94V-0.
Contacts: Phosphor Bronze.

Electrical Characteristics:

Insulator Resistance: 100MΩ min. at DC 500V.
Contact Resistance: 20mΩ max. at DC 100mA.
Operating Temperature: -55°C~+125°C .

***RoHS Compliant**

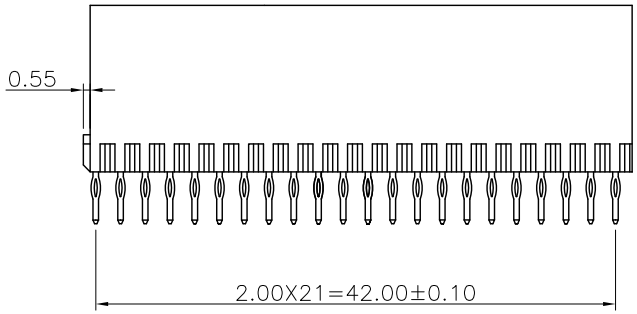

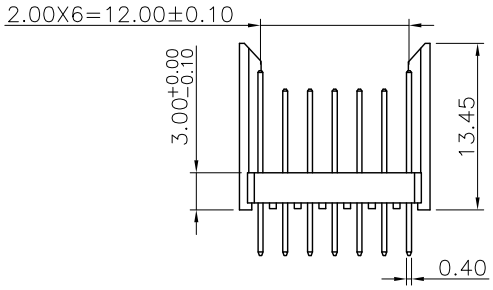

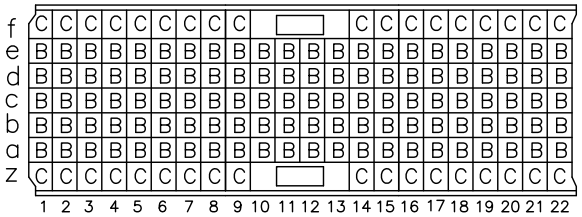

CONTACT LAYOUT

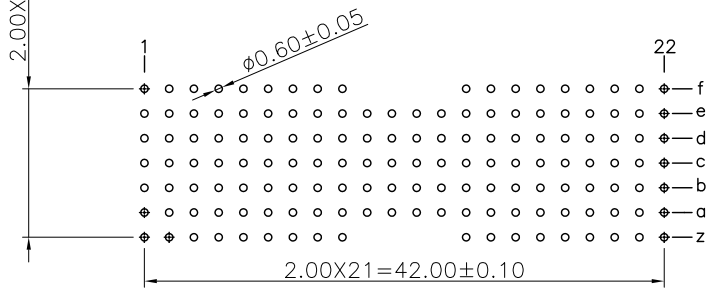

P.C. Board Layout
(Top View)

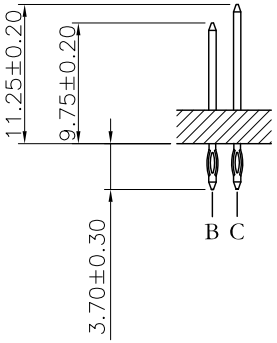

RoHS Compliant

MORETHANALL
PCB CONNECTORS
Cable ASSEMBLIES
煜倫股份有限公司
www.morethanall.com

DRAWING BY CY	
CHECKED BY GENIUS	
UNIT / mm	SCALE 1 : 1
DATE	
SIZE A4	PPOJECTION

TOLERANCES ARE
X. ±
.X ±
.XX ±
.XXX ±
ANG ±

照片框

ORDER INFORMATION

HM7AB-PP03BC-146-LF

- SERIES
- MALE
- PRESS FIT
- 3.7mm
- BC TYPE
- 146 WAY
- LEADFREE

DESCRIPTION: