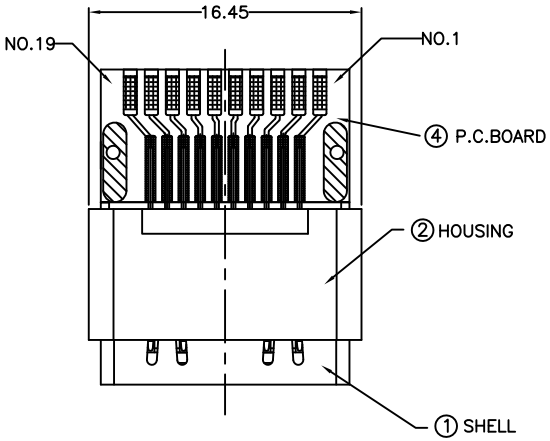

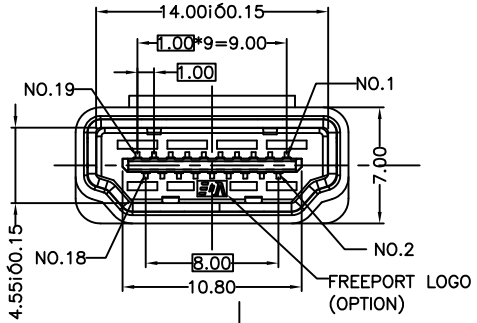

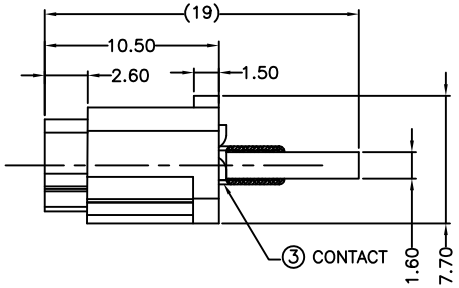

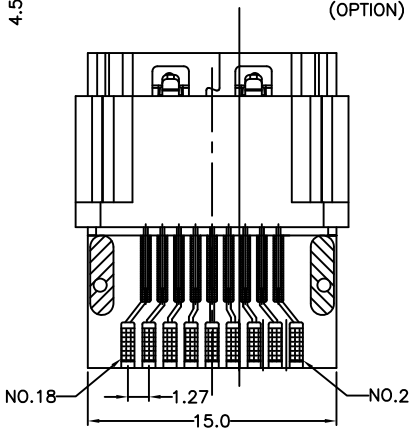

NOTE:

1. ELECTRICAL :
   - 1.1 CONTACT CURRENT RATING: 0.5A MIN.
   - 1.2 VOLTAGE RATING :40V AC (rms)
   - 1.3 WITHSTANDING VOLTAGE: 300 VAC FOR 1 MINUT
   - 1.4 INSULATION RESISTANCE: 100 MEGAOHMS MIN.
   - 1.5 CONTACT RESISTANCE: 30 MILLIOHMS MAX.
2. ENVIRONMENTAL :
   - 2.1 OPERATING TEMPERATURE:−25°C TO +85°C

ITEM	PART NAME	Q'TY/EA	MATETIALS	NOTE
④	P.C.BOARD	1	FR−4	
③	CONTACT	19	COPPER ALLOY	GOLD PLATED OVER NICKEL
②	HOUSING	1	THERMOPLASTIC	UL94V−0
①	SHELL	1	COPPER ALLOY	GOLD, OR NICKEL PLATING

RoHS Compliant

MORETHANALL PCB CONNECTORS Cable ASSEMBLIES

煜倫股份有限公司

www.morethanall.com

DRAWING BY CY	
CHECKED BY GENIUS	
UNIT / mm	SCALE 1 : 1
DATE	
SIZE A4	PPOJECTION

TOLERANCES ARE
X. ± 0.40
.X ± 0.30
.XX ± 0.20
.XXX ±
ANG ± 1°

照片框

ORDER INFORMATION

HDMI-SEBS-19-LF

SERIES
FEMALE
EDGE CLIP
PCB
SOLDER
19WAY
LEADFREE

DESCRIPTION:HDMI RECEPTACLE WITHOUT WING SOLDER TYPE WITH P.C.BOARD