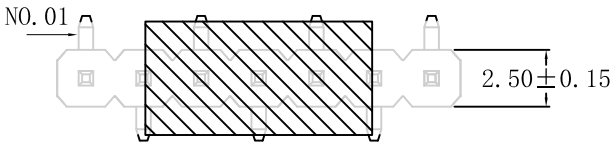

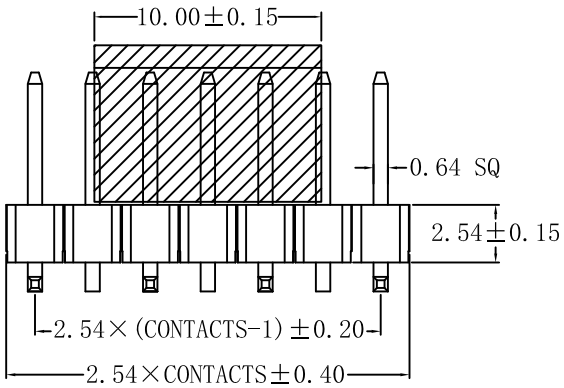

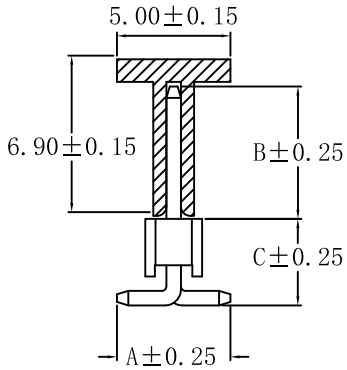

MATERIAL

HOUSING	:NY6T, UL-94V0
CAP	:NY6T, UL-94V0
CONTACT	:COPPER ALLOYS
PLATED	:TIN-PLATED
COLOR	:BLACK

SPECIFICATION

CURRENT	: 3A
OPERATING TEMPERAURE	: -55° C TO +105° C
CONTACT RESISTANCE	: 20 MILLIOHMS MAX
INSULATION RESISTANCE	: 1000 MEGAOHMS MIN
WITHSTAND VOLTAGE	: 1000 V AC/Minite

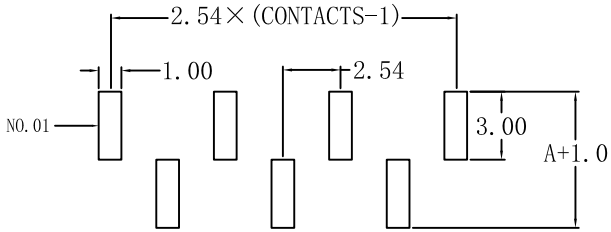

P.C.B. LAYOUT(TYPE-A)

A: 5.00 mm
B: 8.10 mm
C: 3.80 mm

CONTACTS			
	1×11	1×21	1×31
1×02	1×12	1×22	1×32
1×03	1×13	1×23	1×33
1×04	1×14	1×24	1×34
1×05	1×15	1×25	1×35
1×06	1×16	1×26	1×36
1×07	1×17	1×27	1×37
1×08	1×18	1×28	1×38
1×09	1×19	1×29	1×39
1×10	1×20	1×30	1×40

RoHS Compliant

MORETHANALL PCB CONNECTORS Cable ASSEMBLIES
煜倫股份有限公司
www.morethanall.com

DRAWING BY CY		TOLERANCES ARE
CHECKED BY GENIUS		X.± .X±0.38 .XX±0.25 .XXX± ANG±5°
UNIT/mm	SCALE 1:1	
DATE		
SIZE A4	PPOJECTION	

照片框

ORDER INFORMATION

H-V38X81TC-1XxxR-LF

- SERIES
- 180°SMT
- HIGH 3.8mm
- NON POST
- CONTACT 8.1mm
- TIN
- CAP
- 1X02:02WAY
- 1X40:40WAY
- R TYPE FOOT POSITION
- LEADFREE

DESCRIPTION: PIN HEADER 2.54PH SMT+CAP H:2.54 1*XXPIN