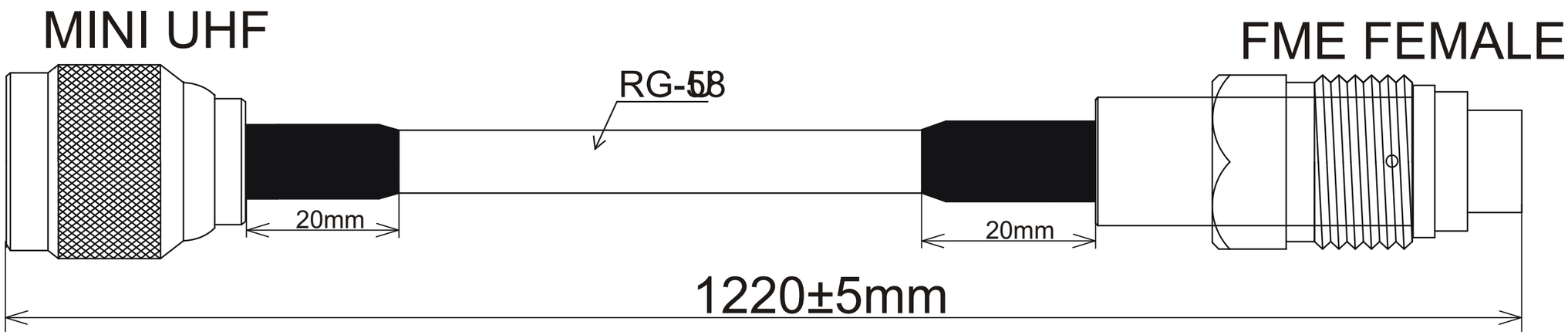

RoHS Compliant

MORETHANALL CONNECTORS ASSEMBLIES

煜倫股份有限公司

PART NO. FMEMUHF-1S1S58-A48N			
DWG NO. FMEMUHF-1S1S58-A48N	CHECKED BY CY	TOLERANCES ARE .X ± 0.2 .XX ± 0.1 .XXX ± AWG	DESCRIP TION:
FILE NO.	DRAWING BY		
UNIT / mm · SCALE 1 : 1	PROJECTION		AREA · REVISIONS · HK · DATE