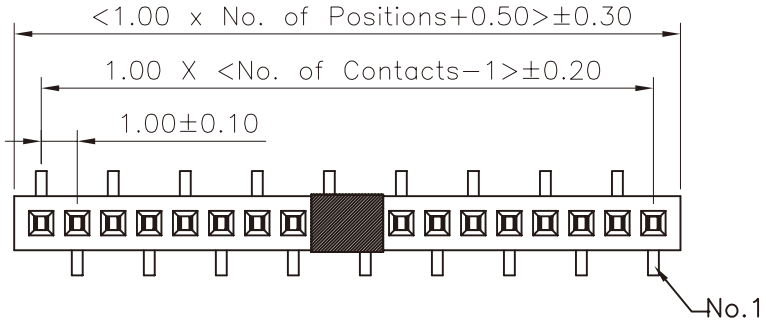

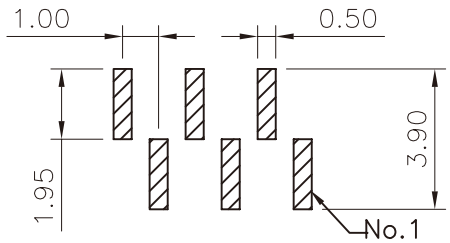

RECOMMENDED P.C.B.LAYOUT

(Tolerance:±0.05)

Specifications

Current Rating: 1Amp

Insulation Resistance: 1000MΩ Min.

Dielectric Withstanding: 300V AC

Contact Resistance: 20mΩ Max.

Operating Temperature:−40°C to +105°C

Materials

Contact Material: Phosphor Bronze

Insulator Material: Polyester, UL 94V−0

LCP Or Equivalent material Black

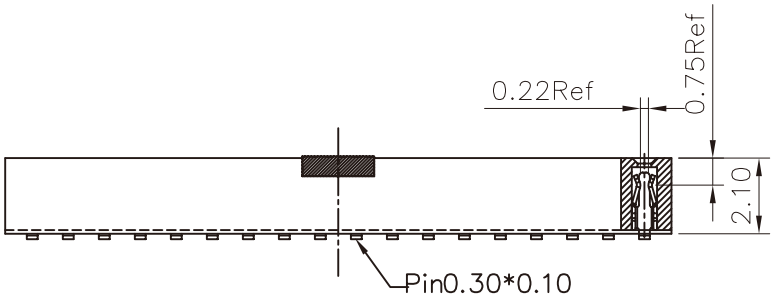

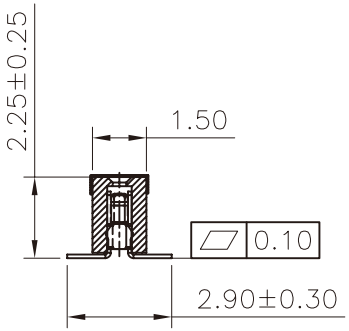

RoHS Compliant

MORETHANALL PCB CONNECTORS Cable ASSEMBLIES

煜倫股份有限公司

www.morethanall.com

DRAWING BY CY		TOLERANCES ARE
CHECKED BY GENIUS		X. ±
UNIT / mm	SCALE 1 : 1	.X ±
		.XX ±
DATE		.XXX ±
		ANG ±
SIZE A4	PPOJECTION	

照片框

ORDER INFORMATION

F10-V22XC-1XxxR-LF

SERIES

180°SMT HIGH 2.25mm

CAP NON POST

1X02:02 WAY
1X40:40 WAY

R TYPE FOOT

LEADFREE

DESCRIPTION: 1.00 FEMALE HEADER SINGLE ROW SMT TYPE CONNECTOR