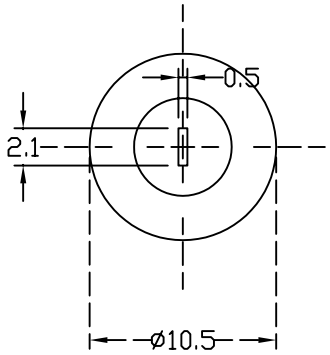

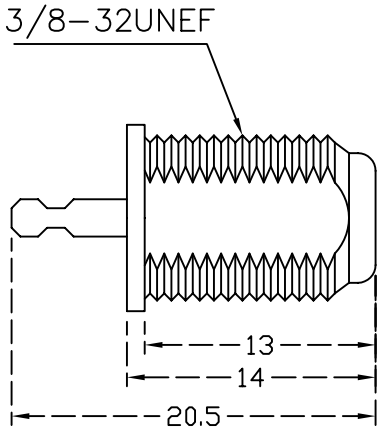

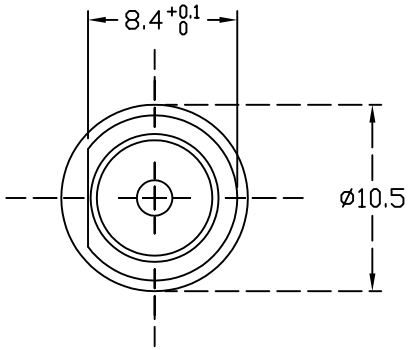

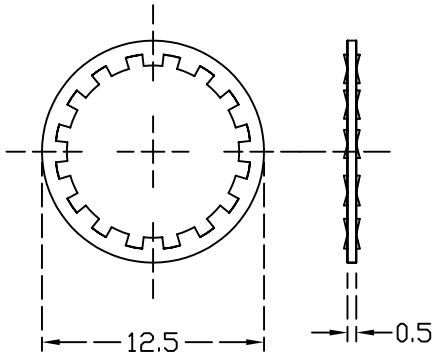

(LOCK WASHER)

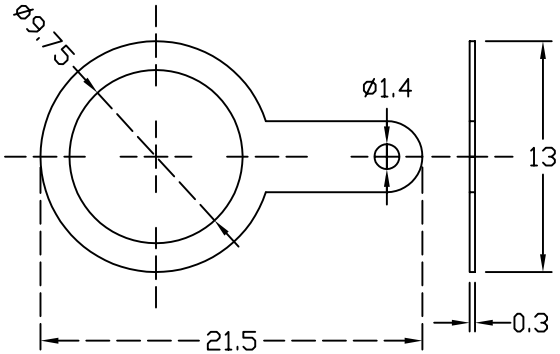

(SOLDER TAG)

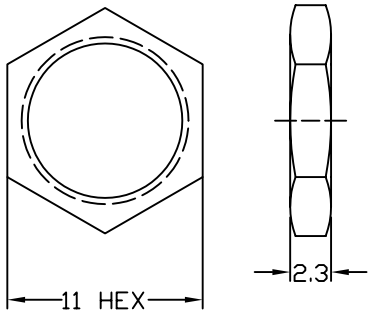

(NUT)

FINISH : NICKEL PLATING
MATERIAL : BRASS

MORETHANALL CONNECTORS ASSEMBLIES	PART NO.F-JSPB20TNW-75							
	DWG NO. F-JSPB20TNW-75		CHECKED BY CY	TOLERANCES ARE .X ± 0.2 .XX ± .XXX ± AWG	DESCRIP TION:	F FEMALE BULKHEAD		
	FILE NO.		DRAWING BY					
煜倫股份有限公司	UNIT / mm	SCALE 1:1	PROJECTION		AREA	REVISIONS	HK	DATE