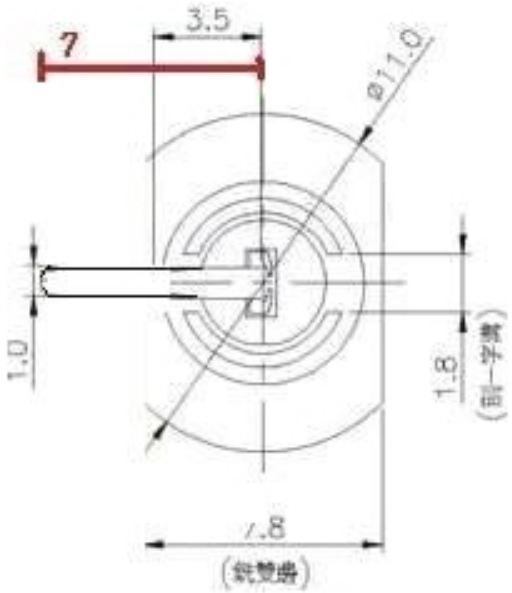

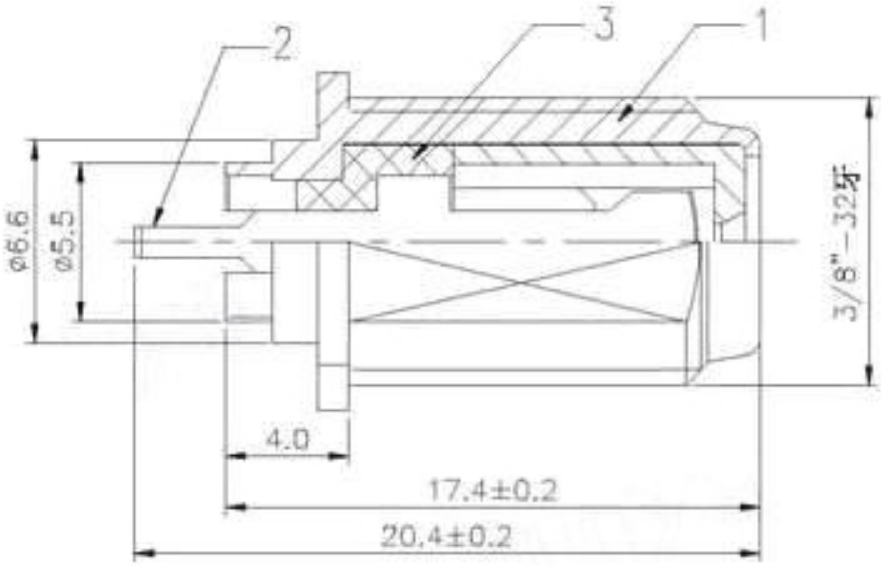

F-JRX-75-LF

LEADFREE

RoHS Compliant

MORETHANALL CONNECTORS ASSEMBLIES	PART NO. F-JRX-75							
	DWG NO. F-JRX-75		CHECKED BY CY	TOLERANCES ARE .X ± 0.2 .XX ± 0.1 .XXX ± AWG	DESCRIP TION:			
煜倫股份有限公司	FILE NO.		DRAWING BY					
	UNIT / mm	SCALE 1 : 1	PROJECTION		AREA	REVISIONS	HK	DATE