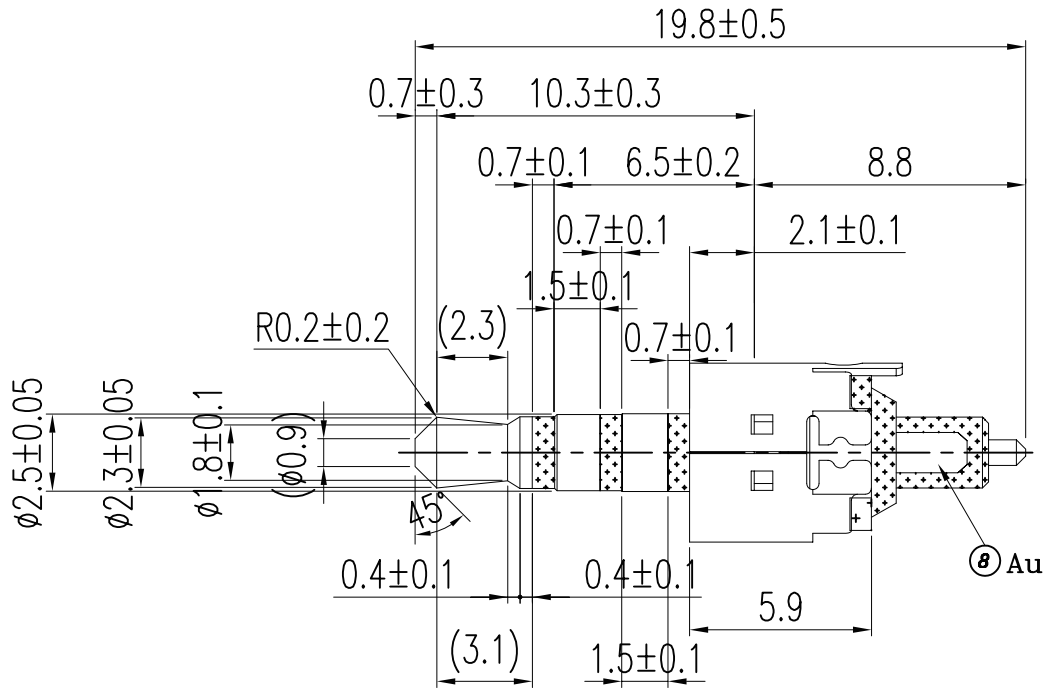

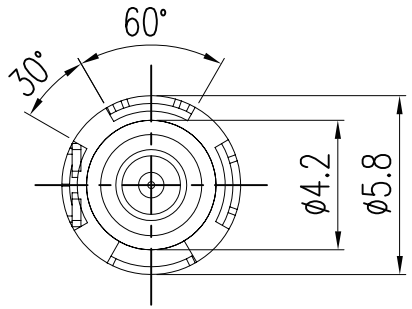

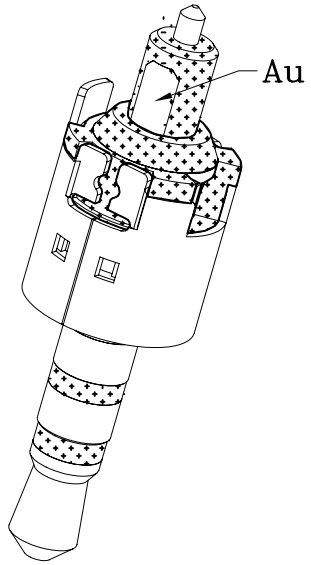

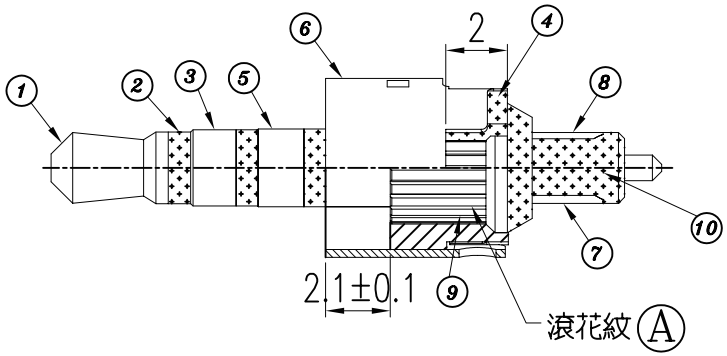

9	BRASS 4極	NICKEL	2um Min
8	P-BRONZE 3極	GOLD	1U" Min
7	P-BRONZE 2極	NICKEL	2um Min
6	BRASS 5極	NICKEL	2um Min
5	BRASS	NICKEL	2um Min
4	POM	BLACK	
3	BRASS	NICKEL	2um Min
2	POM	BLACK	
1	P-BRONZE 1極	NICKEL	2um Min
NO	MATERIAL	PLATING	THICKNESS

RoHS Compliant

MORETHANALL
PCB CONNECTORS
Cable ASSEMBLIES
煜倫股份有限公司
www.morethanall.com

DRAWING BY CY		TOLERANCES ARE
CHECKED BY GENIUS		X. ±
UNIT / mm	SCALE 1 : 1	.X ±
		.XX ±
DATE		.XXX ±
		ANG ±
SIZE A4	PPOJECTION	

照片框

ORDER INFORMATION

EP-S-05-LF

SERIES — SOLDER — 05 WAY — LEADFREE

DESCRIPTION: ø2.5 PLUG 5-POLE