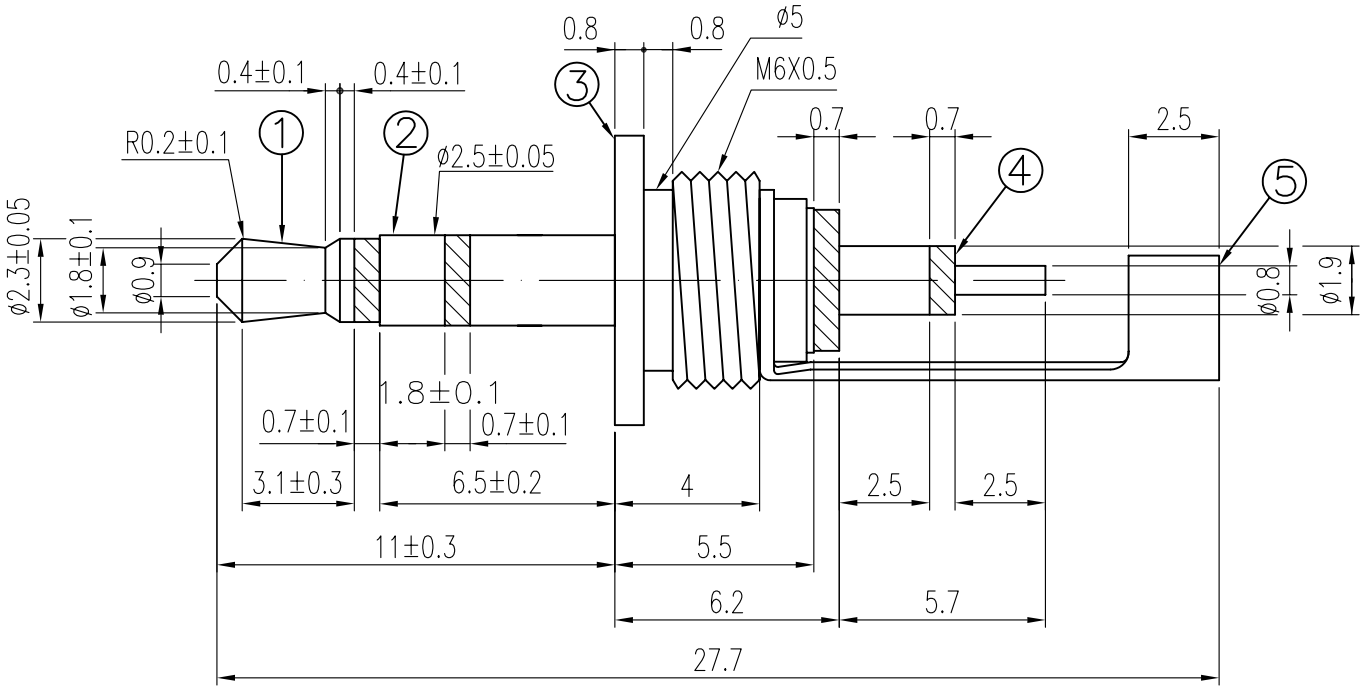


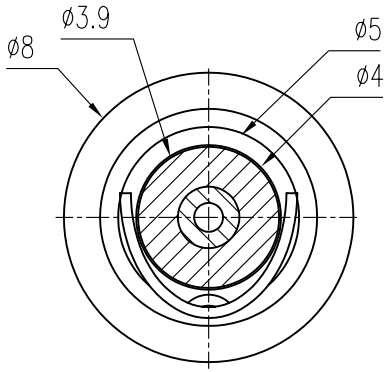


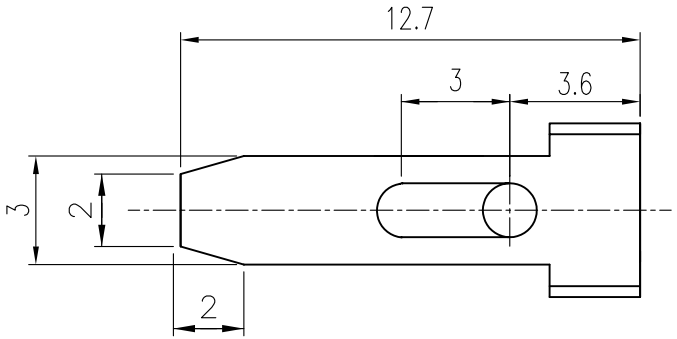


| NO | CONTENT |
|---|---|
| 5 | BRASS NICKEL |
| 4 | P.P BLACK |
| 3 | BRASS GOLD |
| 2 | BRASS GOLD |
| 1 | BRASS GOLD |

RoHS Compliant

MORETHANALL
PCB CONNECTORS
Cable ASSEMBLIES
煜倫股份有限公司
www.morethanall.com

| | |
|---|---|
| DRAWING BY CY | |
| CHECKED BY GENIUS | |
| UNIT / mm | SCALE 1 : 1 |
| DATE | |
| SIZE A4 | PPOJECTION |

TOLERANCES ARE
X. ±
.X ±
.XX ±
.XXX ±
ANG ±

照片框

ORDER INFORMATION

EP-AXC-03-LF

SERIES
LEADFREE
03 WAY
NON COVER
ASSEMBLY

DESCRIPTION: