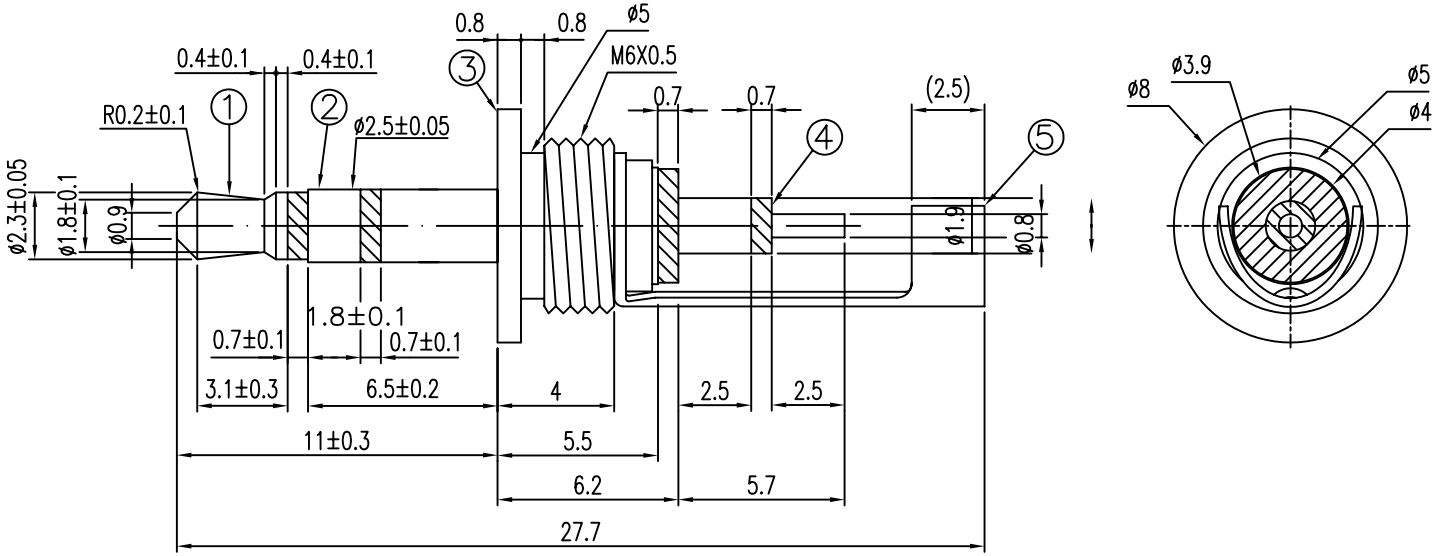

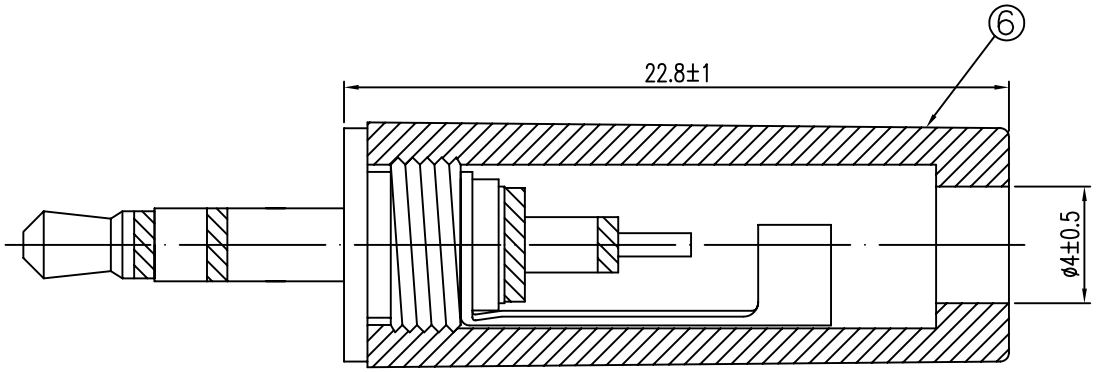

EP-A-03S-LF

LEADFREE

RoHS Compliant

NO	CONTENT
7	
6	ABS BLACK
5	BRASS NICKEL
4	PP BLACK
3	BRASS NICKEL
2	BRASS NICKEL
1	BRASS NICKEL

MORETHANALL CONNECTORS ASSEMBLIES

煜倫股份有限公司

PART NO. EP-A-03S			
DWG NO. EP-A-03S	CHECKED BY CY	TOLERANCES ARE .X ± 0.2 .XX ± 0.1 .XXX ± AWG	DESCRIP TION: *AEESMBLY TYPE ø2.5 mm STEREO PLUG*
FILE NO.	DRAWING BY		
UNIT / mm SCALE 1 : 1	PROJECTION		AREA / REVISIONS / HK / DATE