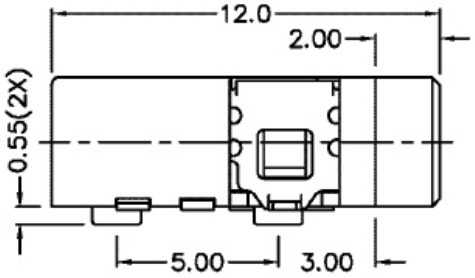

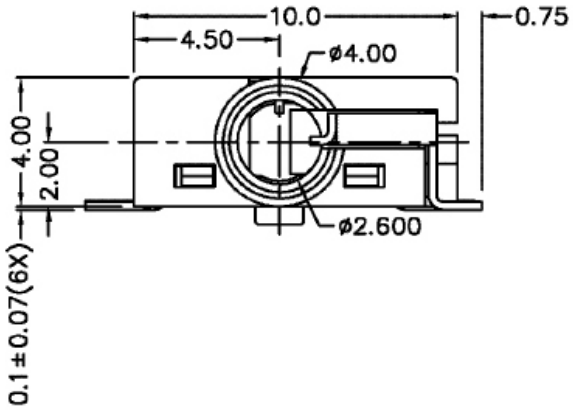

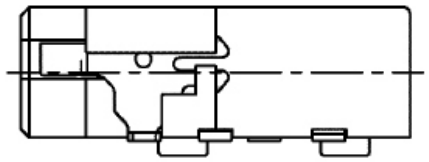

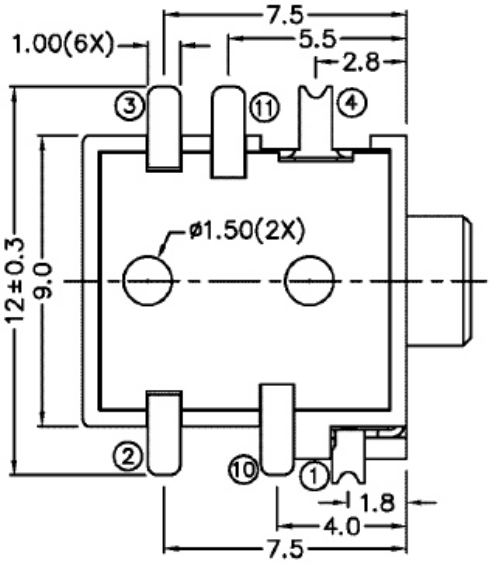

* MATERIAL

TERMINAL 1	: COPPER ALLOY
TERMINAL 2	: COPPER ALLOY
TERMINAL 3	: COPPER ALLOY
TERMINAL 4	: COPPER ALLOY
TERMINAL 10	: BRASS
TERMINAL 11	: BRASS
HOUSING	: PA6T
COVER	: PA6T

EJ-W35-xxxx-LF

LEADFREE

RoHS Compliant

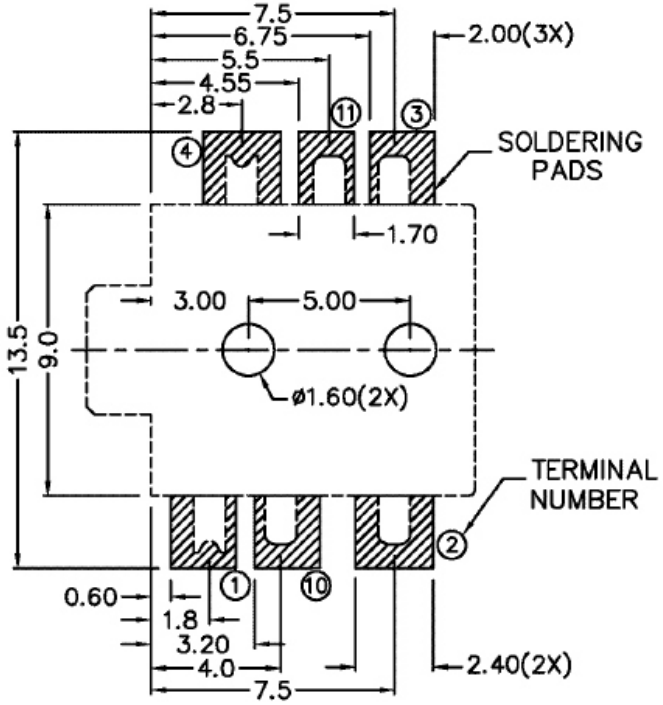

RECOMMENDED SOLDER PAD LAYOUT

MODEL NO.	EJ-W35-06D	EJ-W35-05DR	EJ-W35-05DL	EJ-W35-04
SCHEMATIC	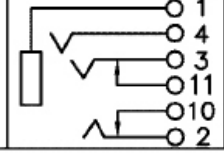	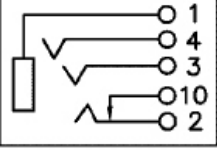	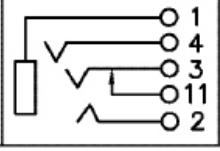	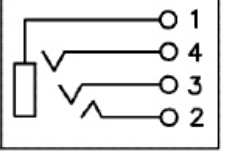

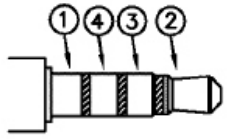

ø2.5 MATE PLUG

MORETHANALL CONNECTORS ASSEMBLIES

煜倫股份有限公司

PART NO. EJ-W35-xxxx					
DWG NO. EJ-W35-xxxx	CHECKED BY CY	TOLERANCES ARE .X ± 0.2 .XX ± .XXX ± AWG	DESCRIP TION:		
FILE NO.	DRAWING BY				
UNIT / mm	SCALE 1 : 1	PROJECTION	AREA	REVISIONS	HK	DATE