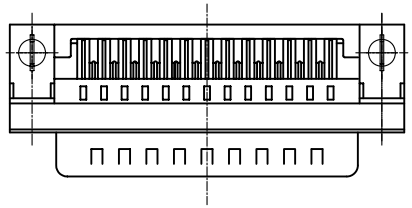

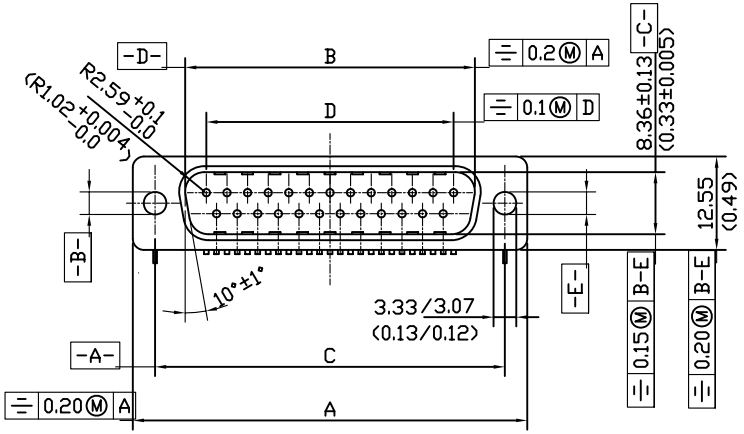

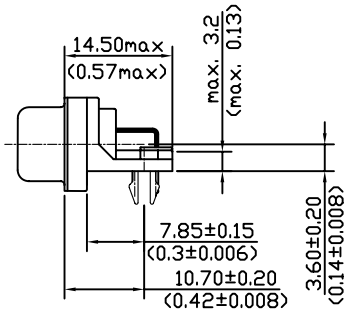

NOTES:

1.UNITS : mm

2.MATERIAL :

HOUSING:PBT WITH 30% GLASS FILLED
UL 94V-0 THR COMPABILITY

CONTACT:BRASS

PLATING:0.8um(30u) Au OVER Ni

HOOK/Bracket:BRASS

NUT:STEEL

SHELL:STEEL

3.ELECTRICAL :VOLTAGE PROOF CONTACT/CONTACT:1000v R.M.S.
VOLTAGE PROOF CONTACT/GROUND 1200v R.M.S.
CONTACT CURRENT 5 AMPS C55 DEGREES CELSIUS TEMP.
CONTACT RESISTANCE:MAX.25M OHM
OPERATION TEMPERATURE -55 TO +125 DEGREES CELSIUS
SOLDERING TEMPERATURE 10 SEC.@260 DEGREES CELSIUS

4.MECHANICAL : MECMANCAL OPERATION 250/500 CYCLES
COMPLIANT TO CECC 75301-802
RECTANGULAR CONNECTORS FOR FREQUENCIES BELOW 3MHZ,
TRAPEZOIDIAL SHAPED SHELL AND ROUND CONTACTS DIAMETER
1MM W/CRIP AND PRESS-IN TERMINATIONS FOR PRINTED
CIRCUIT BOARDS.

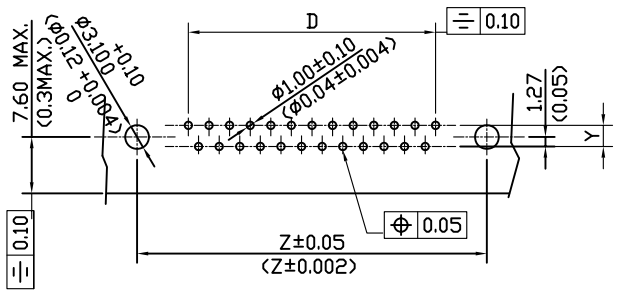

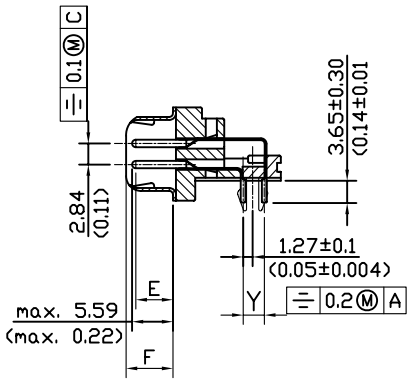

Shell size	No. of contacts	A mm	B mm	C mm	D mm	E mm	F mm	Y mm	Z mm
1	9	31.19 30.43	17.04 16.79	25.12 24.87	10.96	4.04 min.	6.23 5.97	2.54	25.00
2	15	39.52 38.76	25.37 25.12	33.45 33.20	19.18	4.04 min.	6.23 5.97		33.33
3	25	53.42 52.65	39.09 38.84	47.17 46.91	33.12	3.81 min.	6.23 5.97		47.04
4	37	69.70 68.94	55.55 55.30	63.63 63.37	49.68	3.81 min.	6.23 5.97		63.50

RoHS Compliant

MORETHANALL
PCB CONNECTORS
Cable ASSEMBLIES
煜倫股份有限公司
www.morethanall.com

DRAWING BY CY		TOLERANCES ARE
CHECKED BY GENIUS		X. ± .X ± .XX ± .XXX ± ANG ±
UNIT / mm	SCALE 1 : 1	
DATE		
SIZE A4	PPOJECTION	

照片框

ORDER INFORMATION

DRP-PH-xx-LF

SERIES — MALE — HOLE — 09~37 WAY — LEADFREE

DESCRIPTION: D-SUB R/A PRESSFIT