SPECIFICATIONS

ELECTRICAL CHARACERISTICS:

Contact Current Rating:3 Amperes.
Dielectric Withstanding Voltage: AC 1000/60sec.r.m.s.
Insulation Resistance:5000 Medohms Minimum.at DC 500V.
Contact Resistaance:25 Milliohms Maximum.
Operating Temperature:−55°C to+105°C.

MECHANICAL CHARACTERISTICS:

Contact Insertion Force:341 g.Maximum.
Contact Seperation Force:21 g.Maximum.

FINISHES:

MATERIALS:

Contacts:Bass.
Insulator: PBT UL 94V−0 Rated.
Shell:Cold Roller Steel.
Contact:Gold Flash.

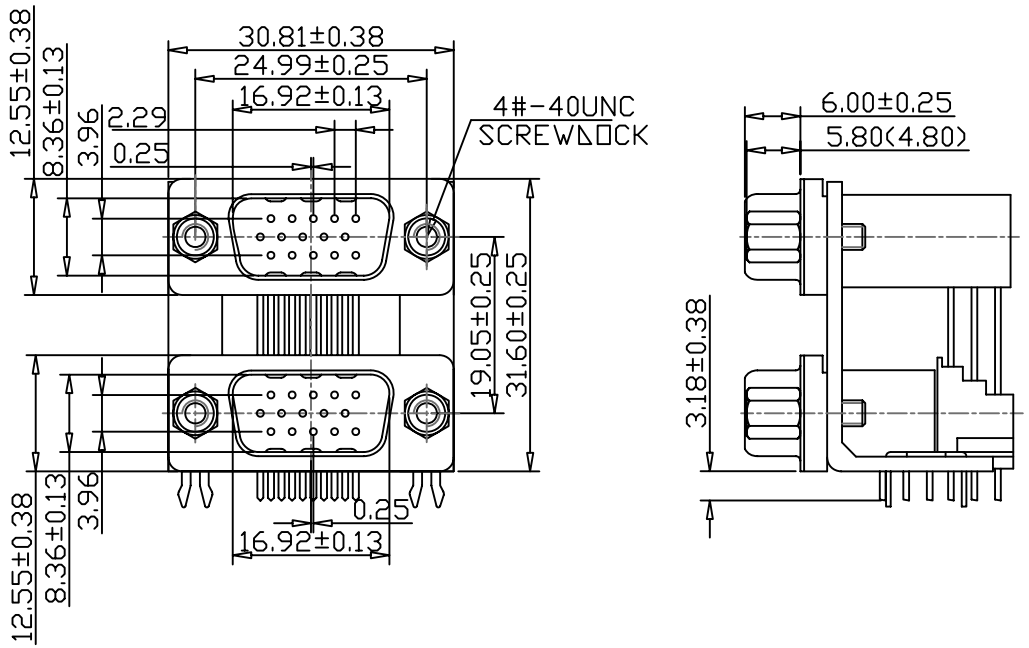

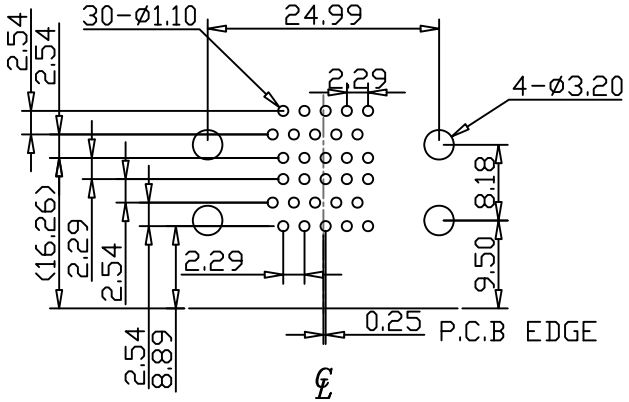

RECOMMENDED P.C.B LAYOUT

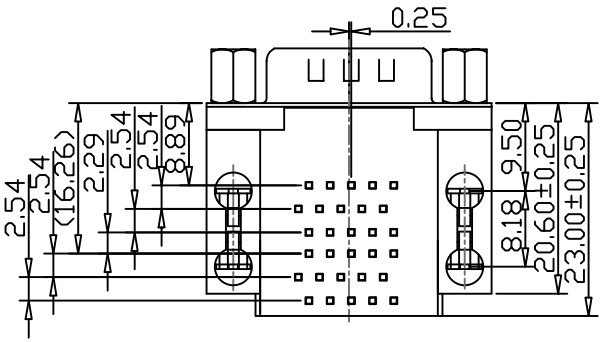

RoHS Compliant

MORETHANALL
PCB CONNECTORS
Cable ASSEMBLIES
煜倫股份有限公司
www.morethanall.com

DRAWING BY CY		TOLERANCES ARE
CHECKED BY GENIUS		X. ±
UNIT / mm	SCALE 1 : 1	.X ±
		.XX ±
		.XXX ±
DATE		ANG ±
SIZE A4	PPOJECTION	

照片框

ORDER INFORMATION

DRB1-MN1981JS30-3535-LF

- SERIES
- MALE TO MALE
- NUT
- 8.18mm
- SPACING 19.05mm
- JACKSCREW
- SEMI GOLD 30u"
- 35 TO 35 WAY
- LEADFREE

DESCRIPTION: D-SUB 0.350"(8.89mm) FOOTPRINT 15 MALE HIGH DENSITY CONNECTOR /15 MALE HIGH DENSITY CONNECTOR, DUAL PORT