MATERIAL:
INSULATOR : ABS UL94HB
SCREW: STEEL

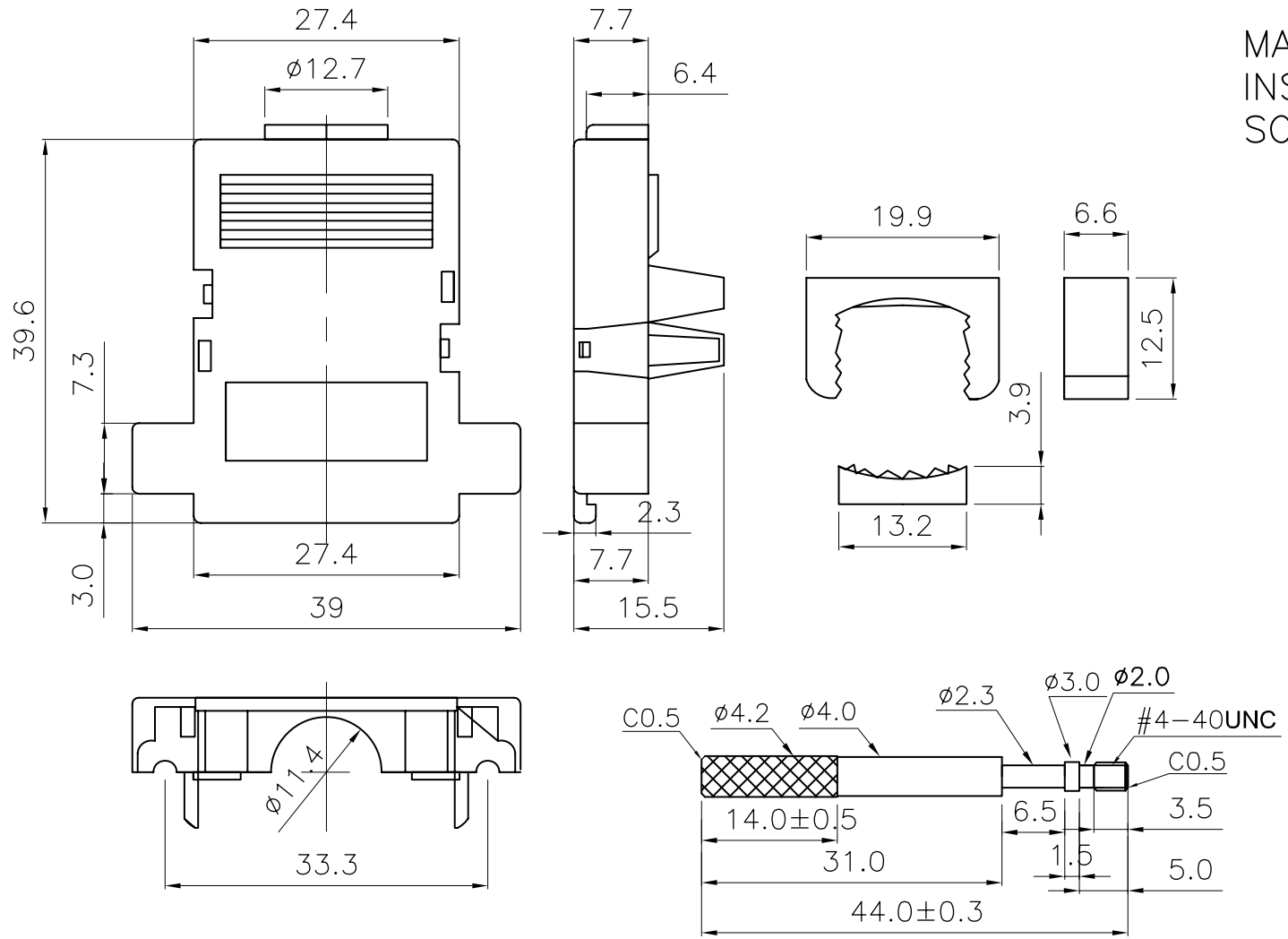

RoHS Compliant

MORETHANALL
PCB CONNECTORS
Cable ASSEMBLIES
煜倫股份有限公司
www.morethanall.com

DRAWING BY CY		TOLERANCES ARE
CHECKED BY GENIUS		X. ±
UNIT / mm	SCALE 1 : 1	.X ± 0.30
DATE		.XX ± 0.20
		.XXX ±
		ANG ±
SIZE A4	PPOJECTION	

照片框

ORDER INFORMATION

DQ-x1T-15-LF

SERIES
B:BEIGE
G:GRAY
K:BLACK
C:METAILZED PLASTIC
THUMBSCREW
SINGLE PACKING
15 WAY
LEADFREE

DESCRIPTION: