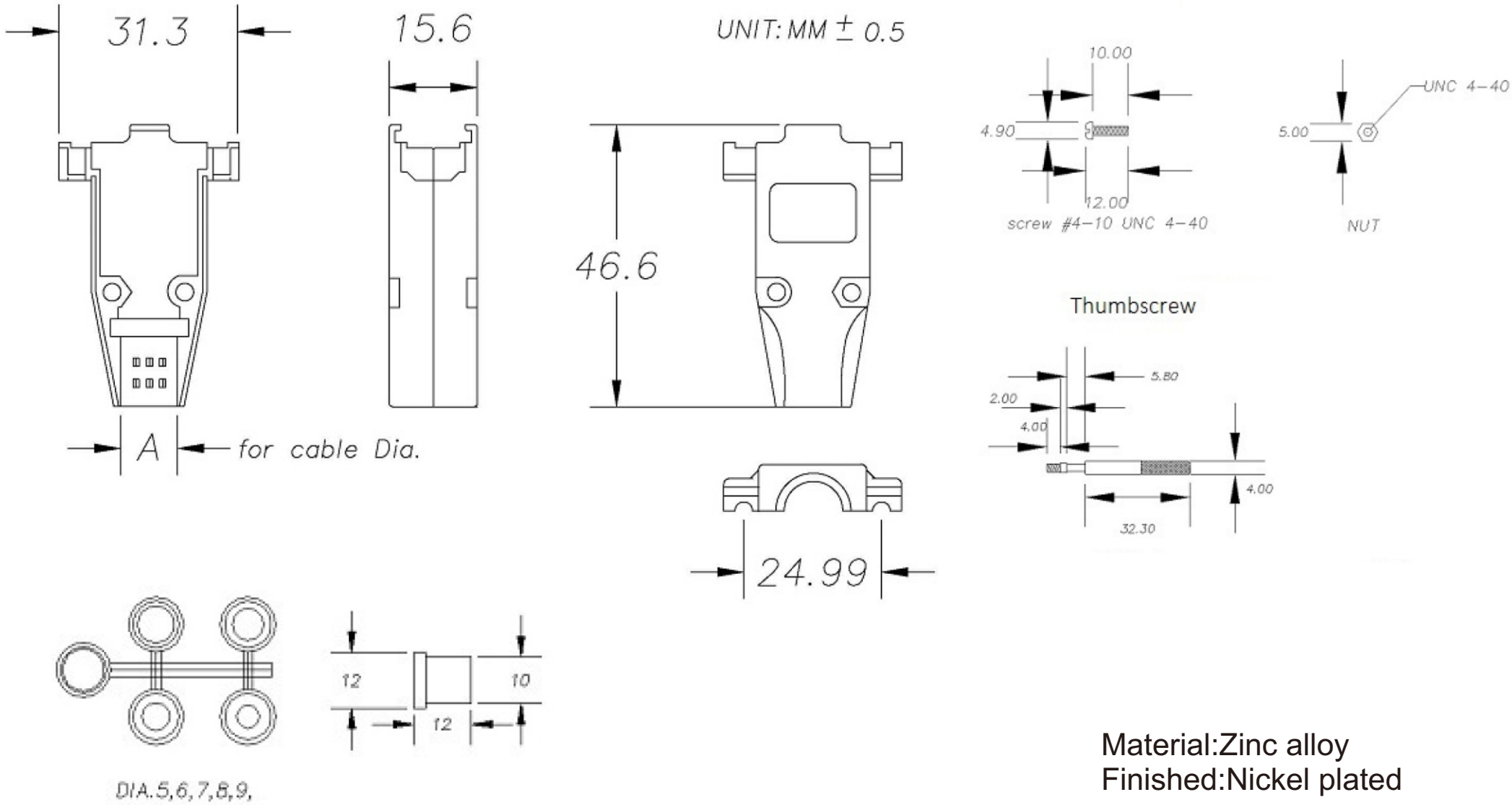

Material:Zinc alloy
Finished:Nickel plated

RoHS Compliant

MORETHANALL
PCB CONNECTORS
Cable ASSEMBLIES
煜倫股份有限公司
www.morethanall.com

DRAWING BY CY		TOLERANCES ARE
CHECKED BY GENIUS		X. ±
UNIT / mm	SCALE 1 : 1	.X ±
		.XX ±
		.XXX ±
DATE		ANG ±
SIZE A4	PPOJECTION	

照片框

ORDER INFORMATION

DHA-N1FGT-09-LF

SERIES
NICKEL
FULL GROMMET
SINGLE PACKING
THUMBSCREW
09WAY
LEADFREE

DESCRIPTION: