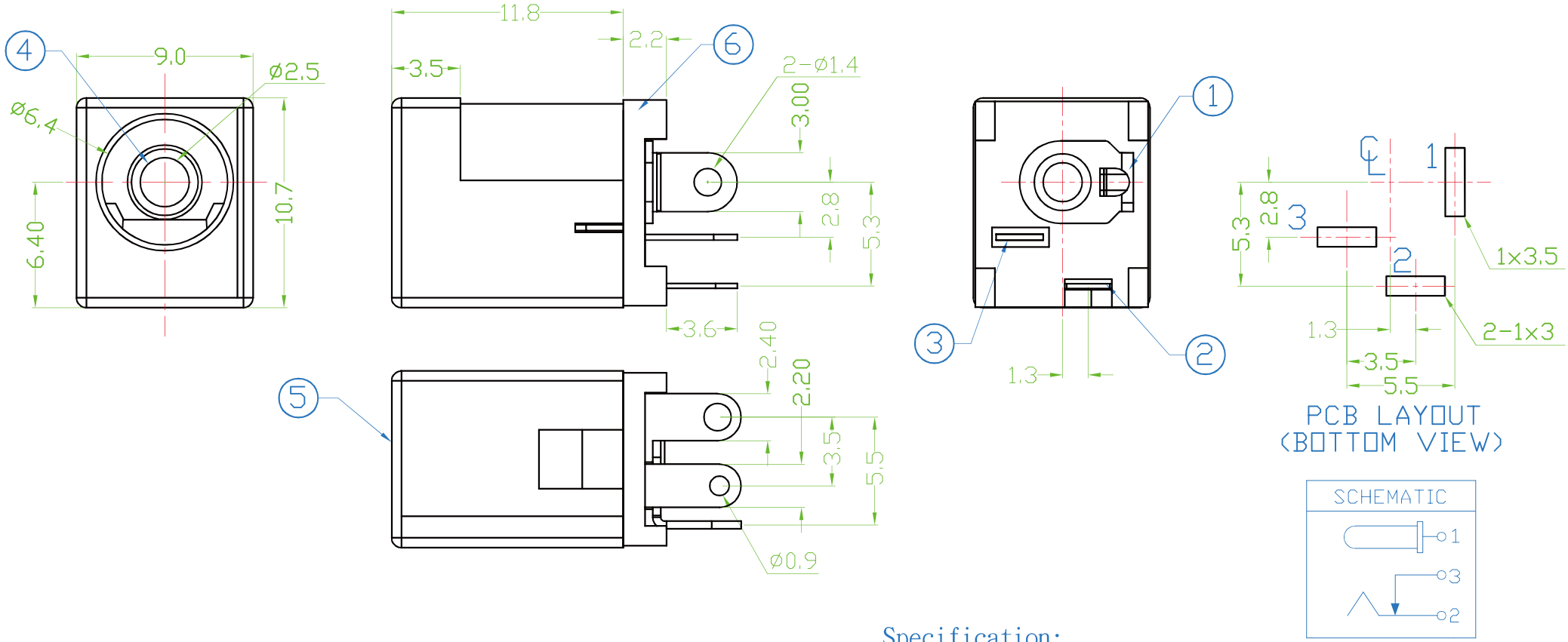


| NO. | NAME | MATERIAL | FINISH | Q'TY |
|---|---|---|---|---|
| 1 | PIN TERM. | BRASS T:0.4 | TIN PLATED | 1 |
| 2 | SLEEVE TERM. | PHOS. BRONZE T:0.25 | TIN PLATED | 1 |
| 3 | BREAK TERM. | BRASS T:0.4 | TIN PLATED | 1 |
| 4 | CENTER PIN | BRASS ø2.5 | NICKEL PLATED | 1 |
| 5 | HOUSING | PBT G.F. | BLACK | 1 |
| 6 | BOTTOM COVER | PBT G.F. | BLACK | 1 |

Specification:

Contact Resistance: 30m Ohm Max. At AC 100mA Max .1KHz

Insulation Resistance: 100M Ohm Min. At 500V DC

Rated Voltage And Current: DC12V. 2A Max;AC 100V. 1A Max

Dielectric Withstanding Voltage: 500V AC for 1 Minute

Insertion Force:3.0Kg Maximum.

Extraction Force:0.3Kg Minimum.

RoHS Compliant

MORETHANALL PCB CONNECTORS Cable ASSEMBLIES

煜倫股份有限公司

www.morethanall.com

| | | |
|---|---|---|
| DRAWING BY CY | | TOLERANCES ARE |
| CHECKED BY GENIUS | | X. ± 0.38<br>.X ± 0.25<br>.XX ± 0.13<br>.XXX ± 0.05<br>ANG ± |
| UNIT / mm | SCALE 1 : 1 | |
| DATE | | |
| SIZE A4 | PPOJECTION | |

照片框

ORDER INFORMATION

DCJ-DH1422-25-LF

SERIES

DIP 180°

HIGH 14mm

2.8+2.5mm

2.5Ø

LEADFREE

DESCRIPTION: DC POWER JACK