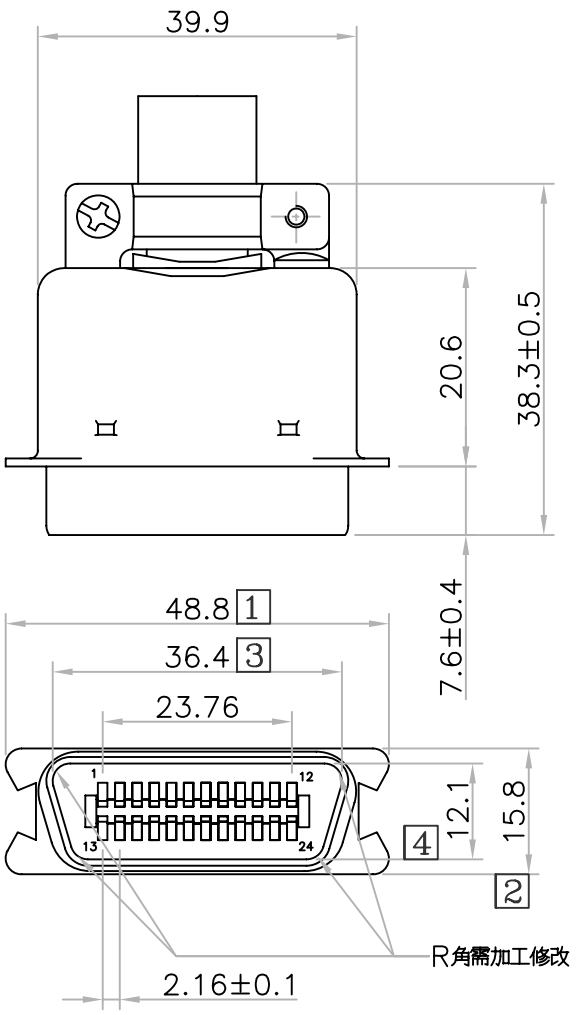

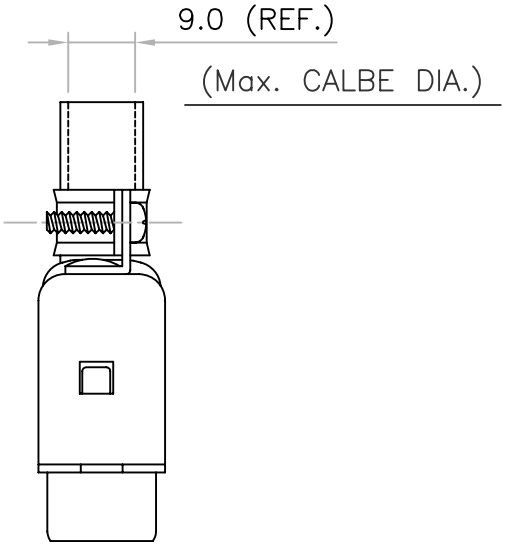

Material & Finish

SHELL:
Steel
Zinc plated, Tin plated
or Nickel plated steel

PIN CONTACT:
Phosphor bronze or Brass
Gold plated

INSULATOR:
PBT & Glass-fibre reinforced
UL 94V-0

CURRENT RATING:
5 Amp

DIELECTRIC STRENGTH:
1000V for one minute

INSULATOR RESISTANCE:
1000MΩ Min. (at 500V DC)

CONTACT RESISTANCE:
25mΩ Max.

TEMPERATURE:
−55° C to +105° C

RoHS Compliant

MORETHANALL PCB CONNECTORS Cable ASSEMBLIES
煜倫股份有限公司
www.morethanall.com

DRAWING BY CY		TOLERANCES ARE
CHECKED BY GENIUS		X. ± 0.40 .X ± 0.30 .XX ± 0.20 .XXX ± ANG ± 3°
UNIT / mm	SCALE 1 : 1	
DATE		
SIZE A4	PPOJECTION	

照片框

ORDER INFORMATION

CSH-P-24-LF
SERIES | MALE | 24 WAY | LEADFREE

DESCRIPTION: CENTRONIC SOLDER TYPE 24 PIN MALE ASSEMBLY METAL STRAIGHT COVER
(鐵殼加工修改R角)