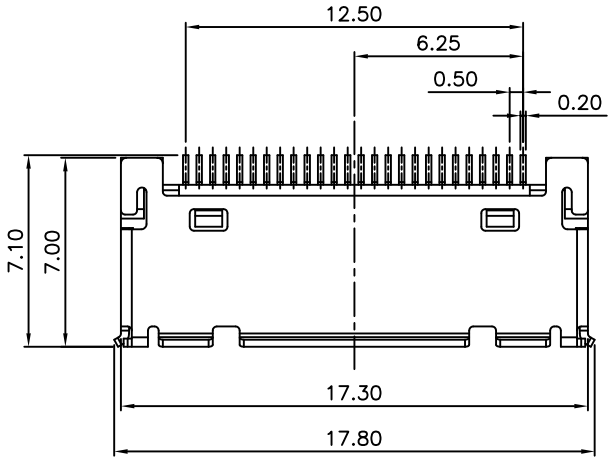

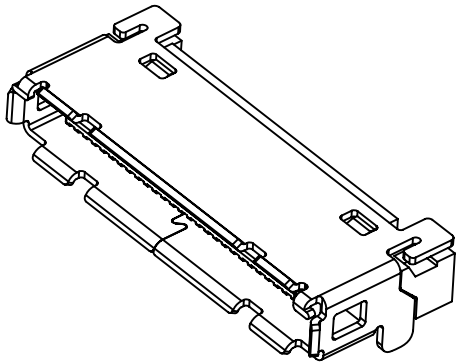

ITEM 項目	PARTS NAME 零件名稱	Q'TY 數量	MATERIAL 材質	FINISH/REMARK 處理/備註
1	HOUSING	1	LCP	UL-94V-0 (Black)
2	CONTACT	26	Phosphor Bronze	CONTACT:15u"Gold TAILS:1u" Gold
3	SHELL	1	STAINLESS	10u" NICKEL PLATING 120u" Tin(Lead Free) 霧錫

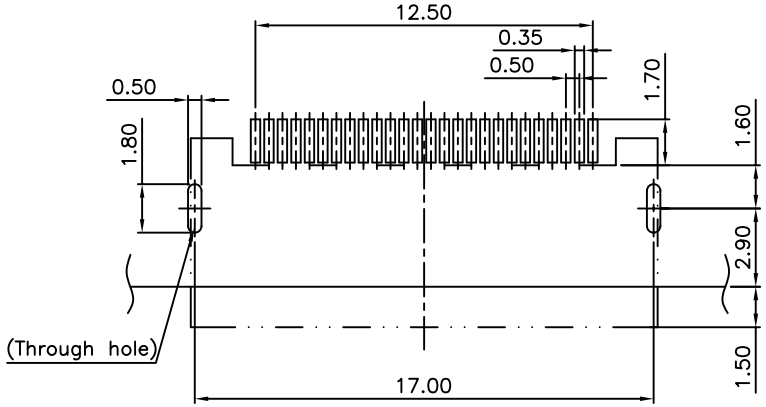

RECOMMENDED P.C. BOARD LAYOUT
(TOLERANCE: ±0.05mm)

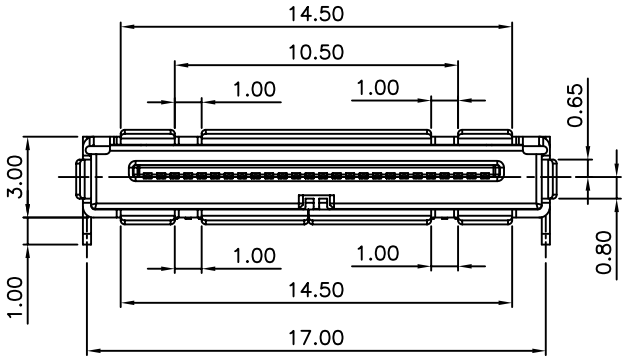

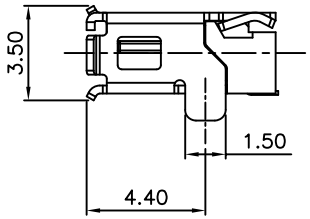

SPECIFICATION
MATERIAL
See drawing
STANDARD DATA
Rating current:0.5A
Operating temperature: −30°C ~ +70°C
Storage temperature: −10°C ~ +60°C
ELECTRICAL
Insulator resistance: 1000m ohms Min. @ 250 VDC
Withstanding voltage: 250 VAC / minute
Contact resistance: 60 m ohms
MECHANICAL
Mating force: 30N(3.06kgf) Max.
Unmating force (Without lock): 4.2N(0.43kgf) Min.
Durability: 10000 cycles Min.
Contact retention force: 2.1N(0.21kgf) Min

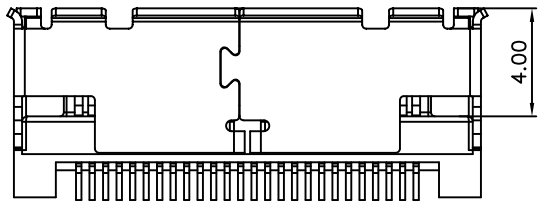

CPSAM-JWA-26-LF
LEADFREE

RoHS Compliant

MORETHANALL CONNECTORS ASSEMBLIES

煜倫股份有限公司

PART NO. CPSAM-JWA-26					
DWG NO. CPSAM-JWA-26	CHECKED BY CY	TOLERANCES ARE .X ± 0.2 .XX ± .XXX ± AWG	DESCRIP TION:	I/O CONNECTOR FOR SMT type-26 position	
FILE NO.	DRAWING BY				
UNIT / mm SCALE 1:1	PROJECTION		AREA	REVISIONS HK	DATE