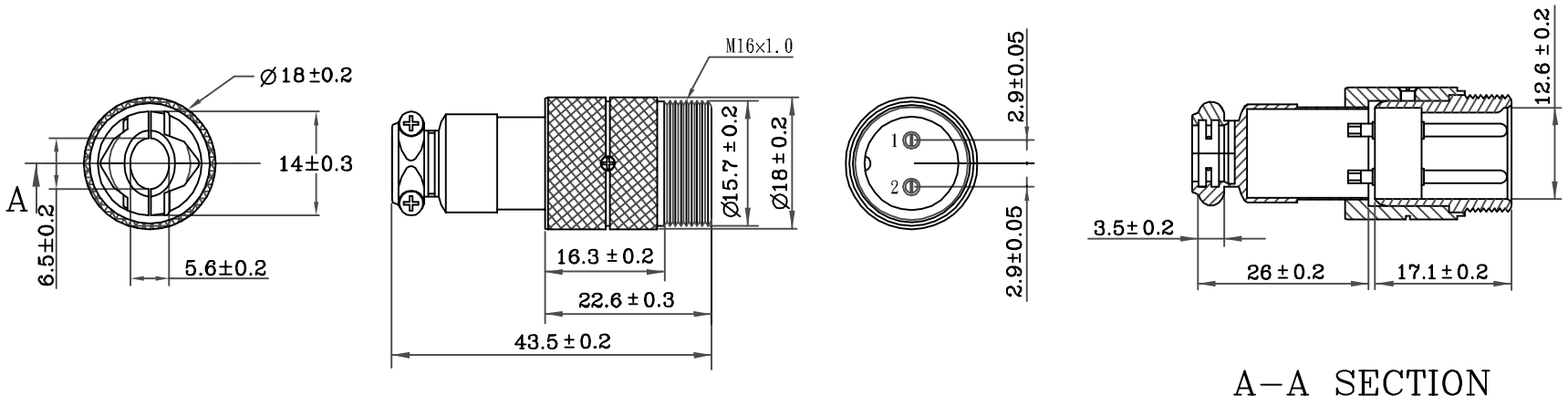

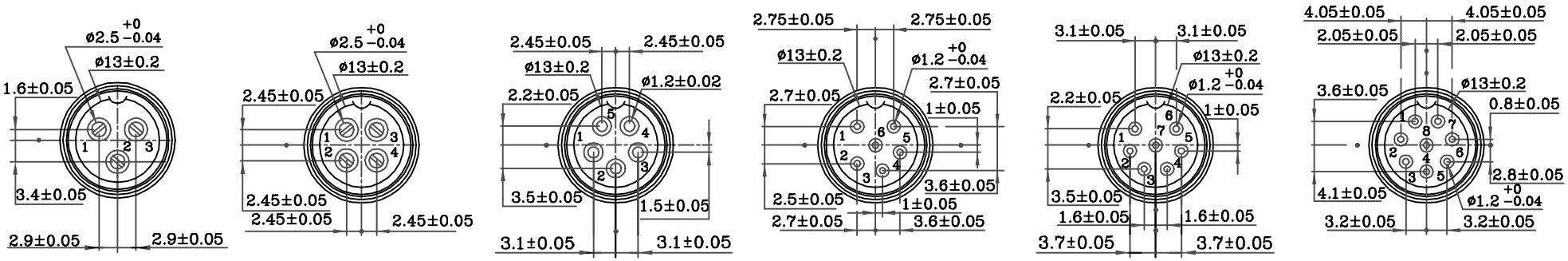

3P

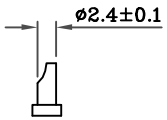

4P

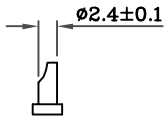

5P

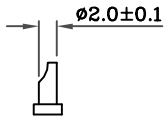

6P

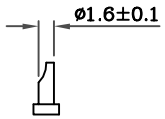

7P

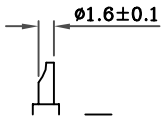

8P

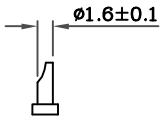

MORETHANALL CONNECTORS ASSEMBLIES

煜倫有限公司

PART NO.	CMC16-PA-xx		
DWG NO.	CMC16-PA-xx	CHECKED BY	CY
FILE NO.		DRAWING BY	
UNIT / mm	SCALE 1:1	PROJECTION	

尺寸公差 ± mm	超過	以下	精級
	0	6	0.05
	6	30	0.1
	30	120	0.15
	120	315	0.2
	315	1000	0.3

DESCRIP TION:				
AREA	REVISIONS	HK	DATE	