TABLE		
Pin Type	Interface Dim.	Pin No.
Detect	3.5mm (0.138in)	25,26
General	4.25mm (0.167in)	The Others
Power	5.0mm (0.197in)	01,13,38,50

MATERIAL
HOUSING: HIGH TEMPERATURE THERMOPLASTIC.
CONTACT: COPPER ALLOY.
PED: BRASS.

PLATING
CONTACT: UNDERPLATED: 50 u" MIN Ni.
CONTACT AREA: SELECTED GOLD OVER Ni PLATED.
SOLDER TAIL: 100 u" MIN Sn OVER Ni PLATED.
PED: 100 u" MIN Sn OVER 50 u" MIN Ni PLATED.

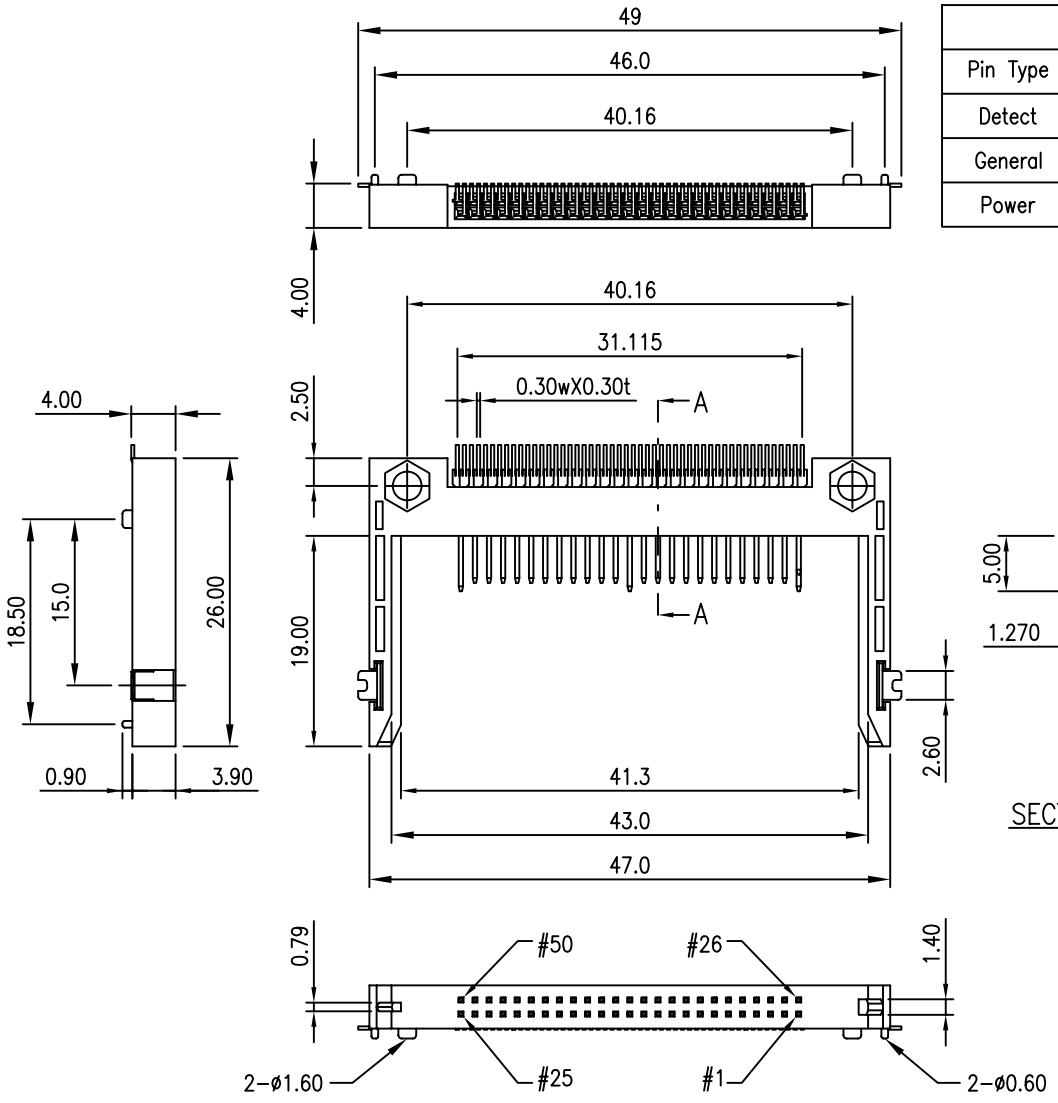

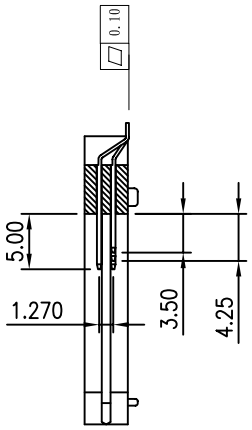

SECTION A-A

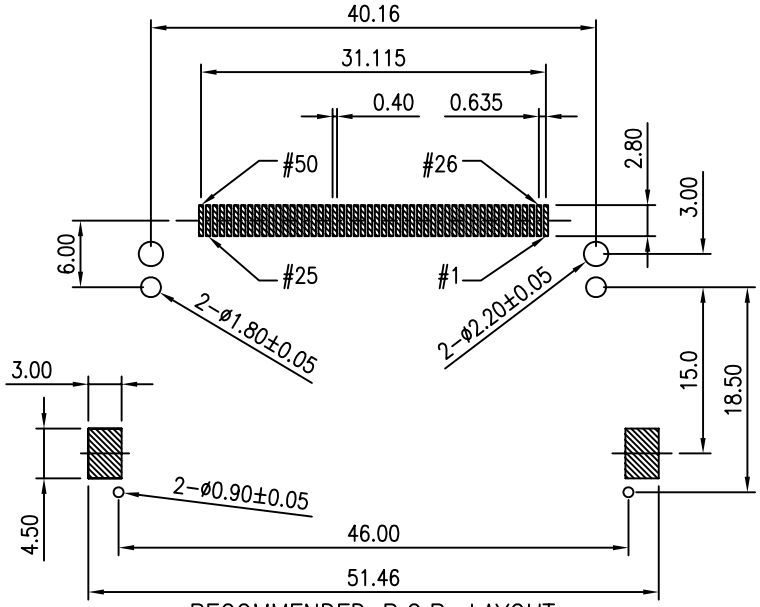

RECOMMENDED P.C.B. LAYOUT

PART NO.
CFC-PW40CE002-50-LF
LEADFREE

RoHS Compliant

MORETHANALL CONNECTORS ASSEMBLIES
煜倫股份有限公司

PART NO. CFC-PW40CE002-50			
DWG NO. CFC-PW40CE002-50	CHECKED BY CY	TOLERANCES ARE .X ± 0.3 .XX ± 0.2 .XXX ± 0.1 AWG	DESCRIP TION: CF Card Header Slim Type Reverse L=26mm Post:40.16mm
FILE NO.	DRAWING BY		
UNIT / mm SCALE 1 : 1	PROJECTION		AREA / REVISIONS / HK / DATE