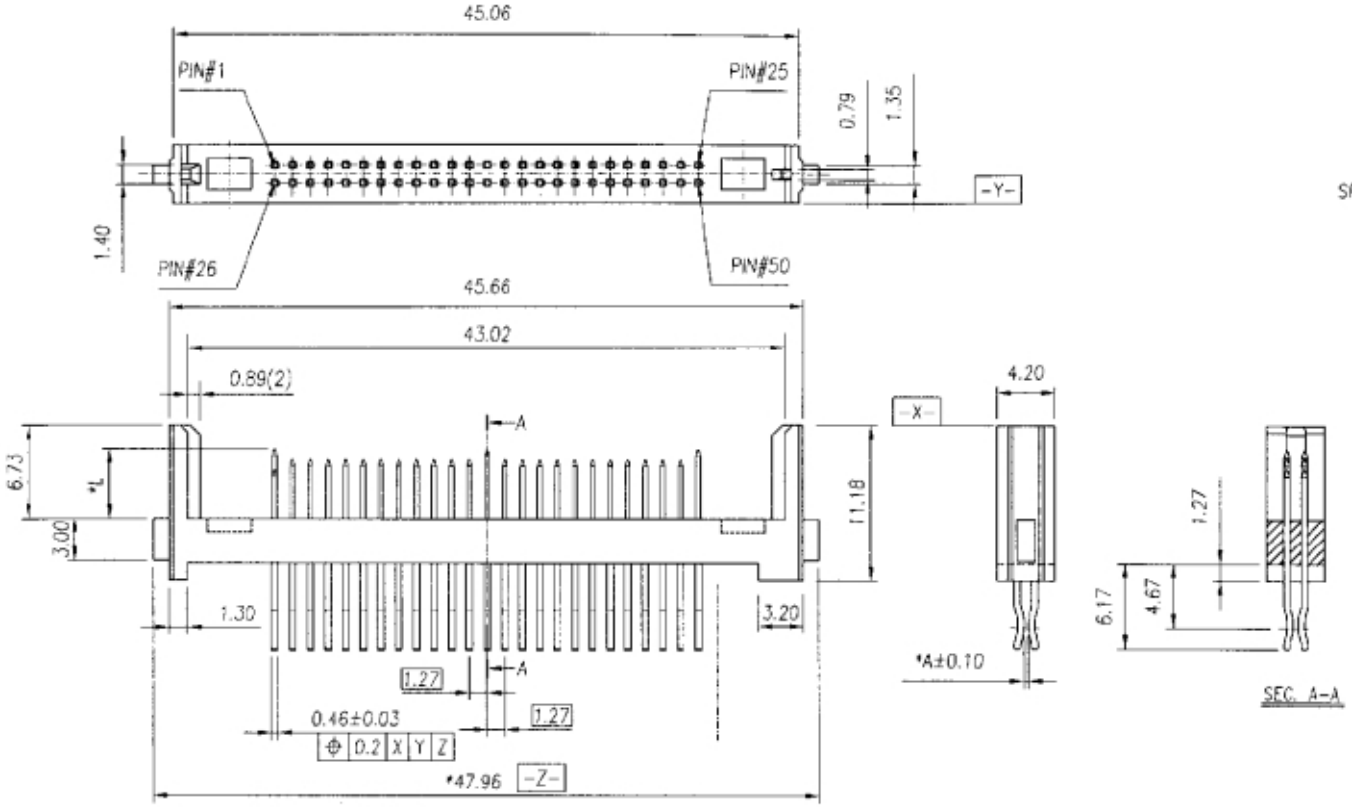

SPECIFICATIONS:

HOUSING : High Temperature Plastic, UL 94V-C
CONTACT : Copper Alloys
VOLTAGE RATING : 100VAC
CURRENT RATING : 0.5A
CONTACT RESISTANCE:40 mΩ max.
INSULATION RESISTANCE:1000M Ω max.
DIELECTRIC STRENGTH : 500VAC/1min
OPERATION TEMPERATURE : -40°C~85°C

CFC-PExx-50-LF

LEADFREE

03:0.3mm / OFFSET
05:0.5mm / OFFSET

RoHS Compliant

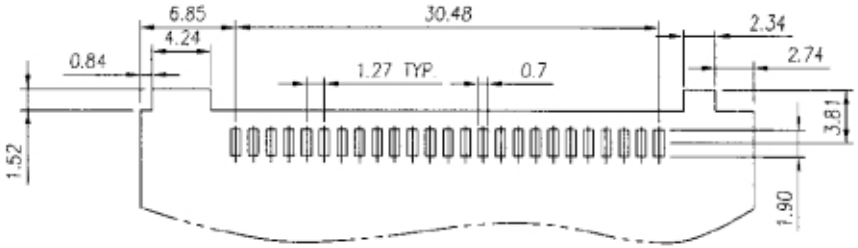

RECOMMENDED P.C.B PATTERN

MORETHANALL CONNECTORS ASSEMBLIES	PART NO. CFC-PExx-50							
	DWG NO. CFC-PExx-50		CHECKED BY CY	TOLERANCES ARE .X ± 0.2 .XX ± 0.1 .XXX ± AWG	DESCRIP TION:			
煜倫股份有限公司	FILE NO.		DRAWING BY					
	UNIT / mm	SCALE 1 : 1	PROJECTION		AREA	REVISIONS	HK	DATE