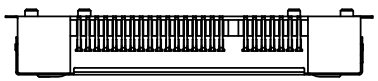

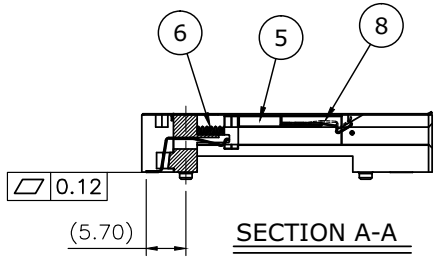

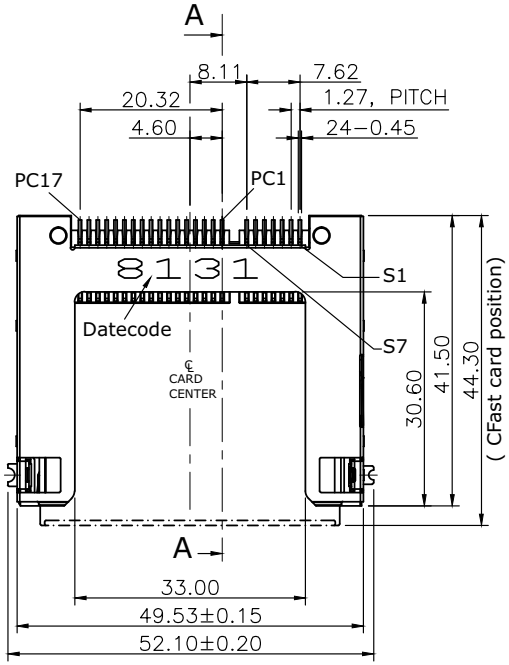

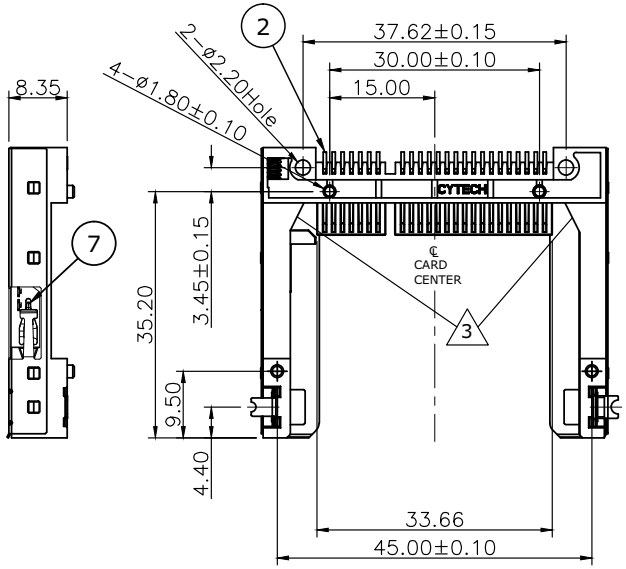

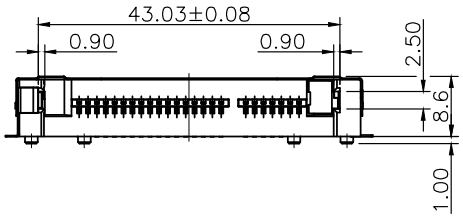

SPECIFICATION:

1. ELECTRICAL
1.1 Current Rating: 1.5A
1.2 Voltage Rating: 100V AC/DC
1.3 Contact Resistance: 30
1.4 Insulation Resistance: 1000 M
1.5 Dielectric Withstanding Voltage: 500V DC

2. MECHANICAL
2.1 Durability: 10000 Cycle
2.2 Insertion Force: 28.8N max.
2.3 Extraction Force: 3.7~24.5N max.

3. ENVIRONMENTAL
3.1 Operating temperature range: -40š ~+85š
3.2 Storage temperature range: -40 š ~+85š

4. SOLDER ABILITY
4.1 Recommended IR Reflow Temperature: 260 š

Datecode: 8131(YWWD)

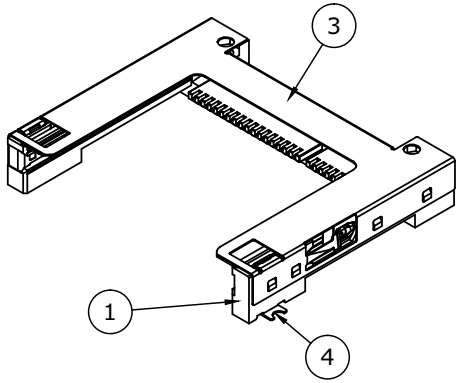

NO.	PART NAME	DESCRIPTION
8	Hook	Stainless Steel
7	Crank	Stainless Steel
6	Spring	Piano Wire
5	Slider	LCP UL94V-0 Black
4	Hold down	Brass C2680, 0.2t, Tin Plating
3	Shell	Stainless Steel SUS304, 0.2T
2	Contact	Phosphor Bronze C5210, 0.2t, 10u" Gold
1	Housing	LCP UL94V-0 Black

RoHS Compliant

MORETHANALL PCB CONNECTORS Cable ASSEMBLIES
煜倫股份有限公司
www.morethanall.com

DRAWING BY CY		TOLERANCES ARE
CHECKED BY GENIUS		X. ±
UNIT / mm	SCALE 1 : 1	.X ±
		.XX ±
DATE		.XXX ±
		ANG ±
SIZE A4	PPOJECTION	

照片框

ORDER INFORMATION

CFA-PW30CE221PP-24-LF

SERIES
MALE
90°SMT
POST TO POST 30.0mm
C TYPE
EAR
TYPE 2
STANDOFF 2.0mm
NORMAL
PUSH PUSH
24WAY
LEAD FREE

DESCRIPTION: CFAST Socket 8.35H Push-Push TypeII

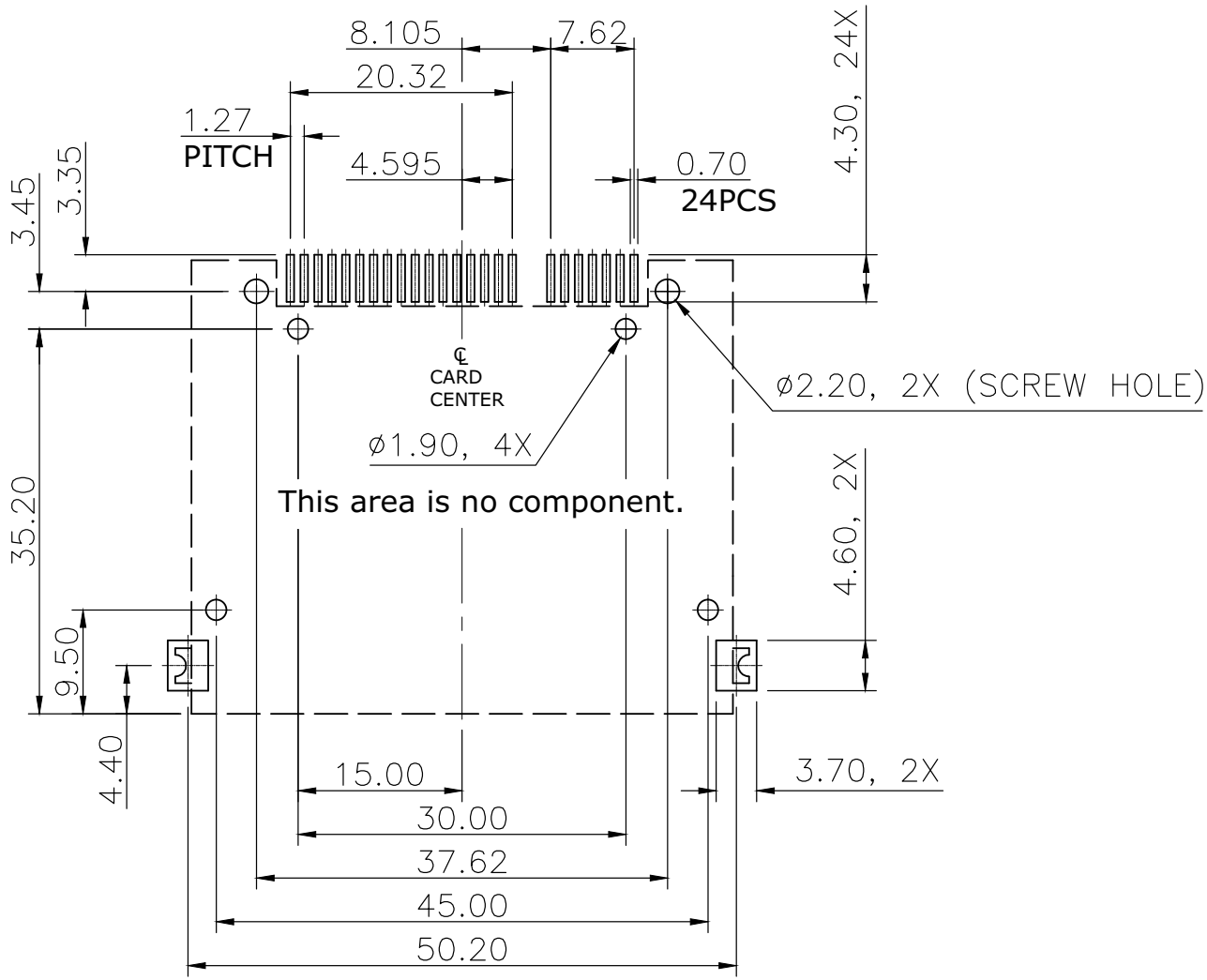

RECOMMENDED LAYOUT (TOP VIEW)

RoHS Compliant

MORETHANALL
PCB CONNECTORS
Cable ASSEMBLIES
煜倫股份有限公司
www.morethanall.com

DRAWING BY CY	
CHECKED BY GENIUS	
UNIT / mm	SCALE 1 : 1
DATE	
SIZE A4	PPOJECTION

TOLERANCES ARE
X. ±
.X ±
.XX ±
.XXX ±
ANG ±

照片框

ORDER INFORMATION

CFA-PW30CE221PP-24-LF

SERIES
MALE
90°SMT
POST TO POST 30.0mm
C TYPE
EAR
TYPE 2
STANDOFF 2.0mm
NORMAL
PUSH PUSH
24WAY
LEAD FREE

DESCRIPTION: CFAST Socket 8.35H Push-Push TypeII