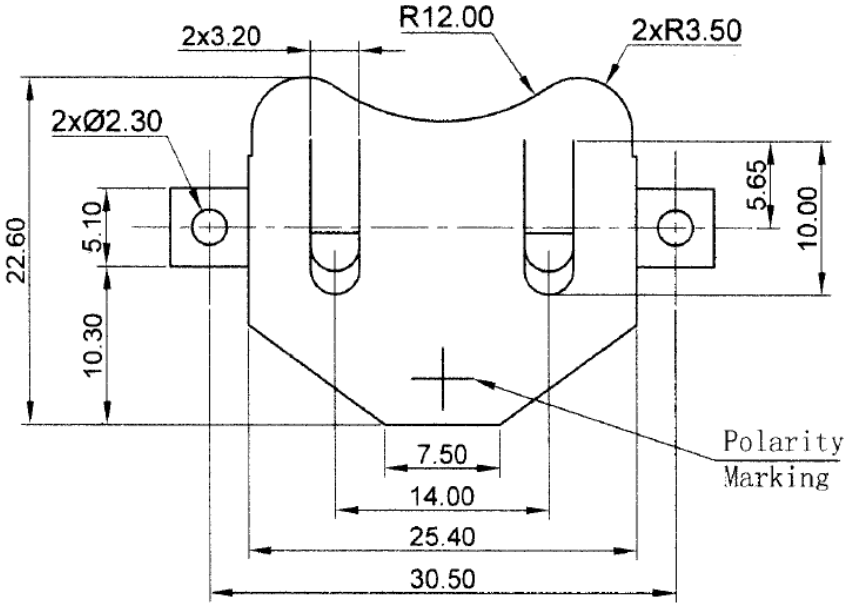

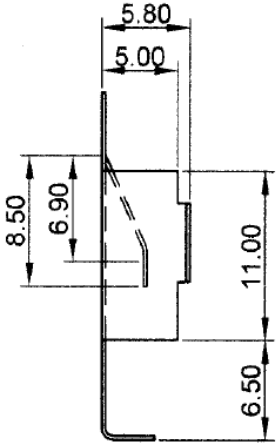

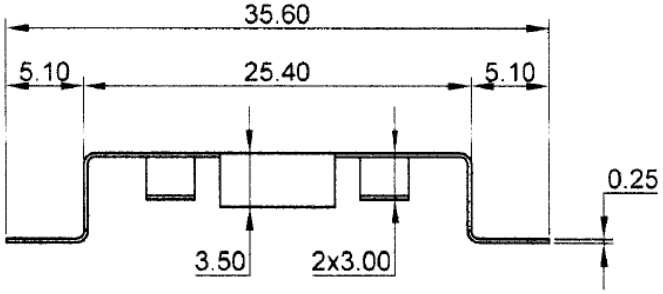

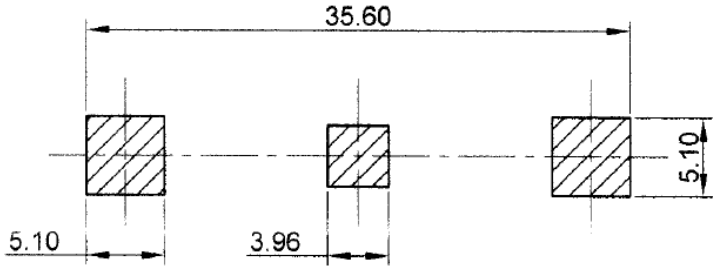

PCB MOUNTING LAYOUT

SPECIFICATION

(1) MATERIAL: 0.25MM THICK PHOSPHOR BRONZE
NICKEL PLATED

RoHS Compliant

MORETHANALL
PCB CONNECTORS
Cable ASSEMBLIES
煜倫股份有限公司
www.morethanall.com

DRAWING BY CY		TOLERANCES ARE
CHECKED BY GENIUS		X. ± .X ± 0.30 .XX ± 0.20 .XXX ± 0.10 ANG ±
UNIT / mm	SCALE 1 : 1	
DATE		
SIZE A4	PPOJECTION	

照片框

ORDER INFORMATION

BTH-W58-24-LF

SERIES
90°SMT
HIGH 5.8mm
CR2425
LEADFREE

DESCRIPTION: