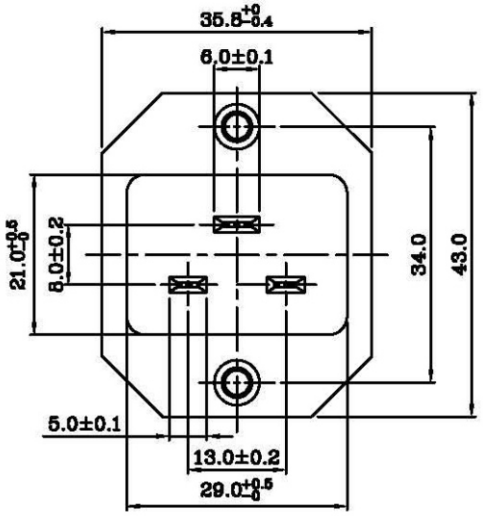

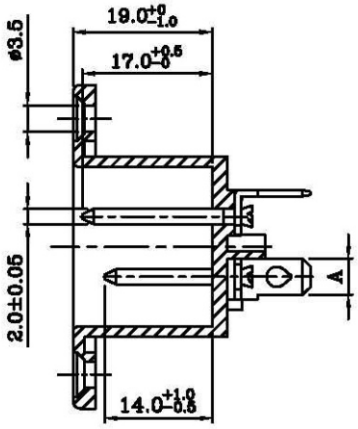

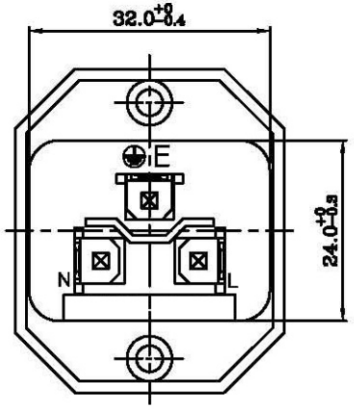

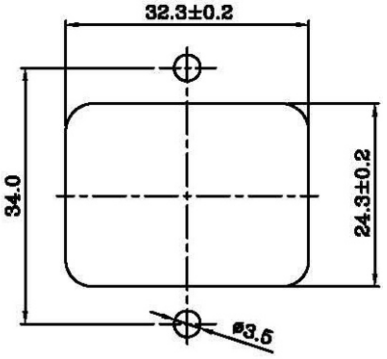

PANEL CUT-OUT

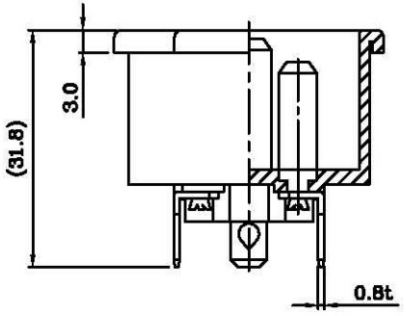

A		
ACH-PQ4P EV-03	ACH-PQ2PEV-03	ACH-PQ6PEV-03
4.8 / 10.0	2.8 / 10.0	6.35 / 10.0

SPECIFICATION:

1. Insulation Resistance: Over 100MΩ at 500V DC.
2. Dielectric strength: 2000V AC 1 Minute.
3. Body Material: Thermoplastic 94V-2~0.

Rating:AC 16A 250V					
符號	安規	認證編號	符號	安規	認證編號
	VDE	40006952			
Rating:AC 20A 250V					
	UL	E184638		CUL	E184638

ACH-PQxPEV-03-LF

- PQx: Q6:TAB 6.35mm / Q4:TAB 4.80mm / Q2:TAB 2.80mm
- LF: LEADFREE

RoHS Compliant

MORETHANALL CONNECTORS ASSEMBLIES

煜倫股份有限公司

PART NO. ACH-PQxPEV-03					
DWG NO. ACH-PQxPEV-03	CHECKED BY CY	TOLERANCES ARE .X ± 0.2 .XX ± .XXX ± AWG	DESCRIP TION:		
FILE NO.	DRAWING BY				
UNIT / mm	SCALE 1 : 1	PROJECTION	AREA	REVISIONS	HK	DATE