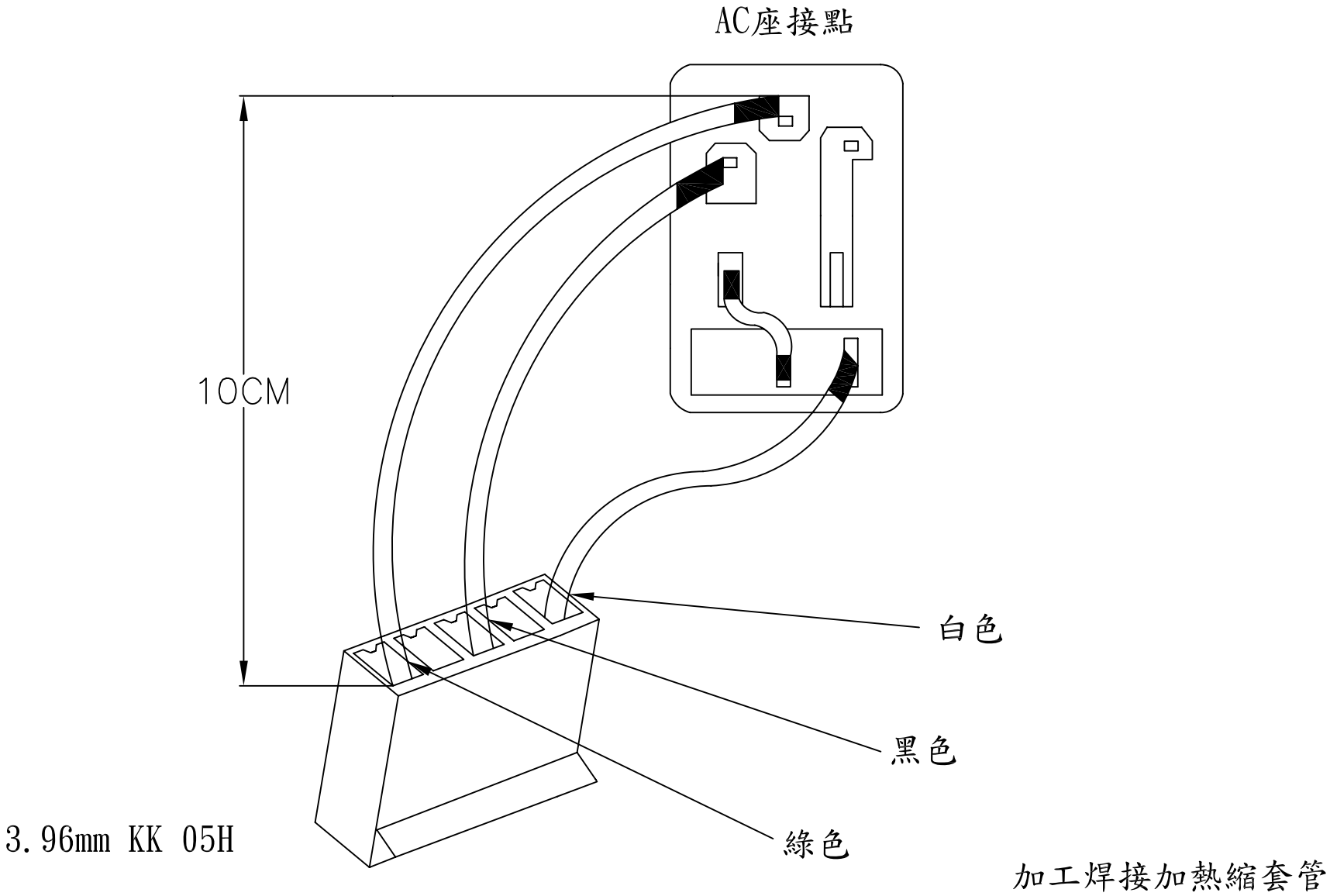

MORETHANALL CONNECTORS ASSEMBLIES	PART NO. ACFSKK-0305-E10C							
	DWG NO. ACFSKK-0305-E10C		CHECKED BY CY	TOLERANCES ARE .X ± 0.2 .XX ± .XXX ± AWG	DESCRIP TION:			
煜倫股份有限公司	FILE NO.		DRAWING BY					
	UNIT / mm	SCALE 1 : 1	PROJECTION		AREA	REVISIONS	HK	DATE