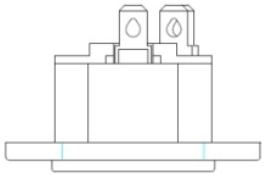

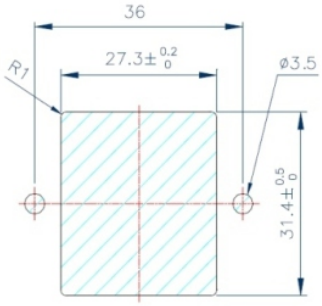

PANEL CUTOUT DIMENSION TABLE

STANDARD:IEC 320-1 C14
STANDARD:IEC 320-1 C14
RATING :10A250V AC
APPROVALS:UL/CSA/VDE/DEMKO/
NEMKO/SEMKO/FIMKO

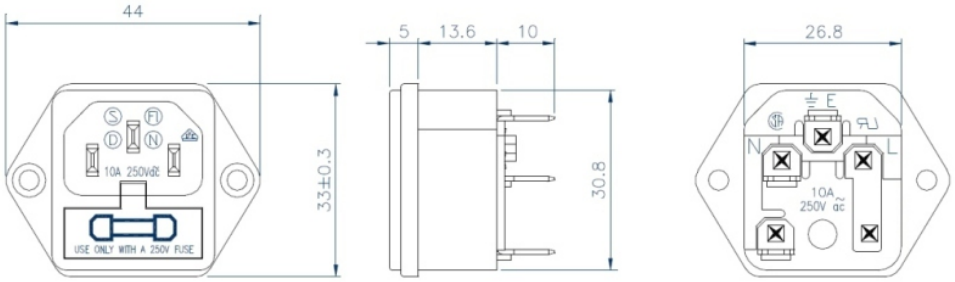

ACF-PQ6FSPE-03H	6.3	
ACF-PS6FSPE-03H	6.3	
ACF-PQ4FSPE-03H	4.8	
ACF-PS4FSPE-03H	4.0	
ACF-PS2FSPE-03H	2.8	

ACF-PxxFSPE-03H-LF
LEADFREE

RoHS Compliant

MORETHANALL CONNECTORS ASSEMBLIES

煜倫股份有限公司

PART NO. ACF-PxxFSPE-03H							
DWG NO. ACF-PxxFSPE-03H	CHECKED BY CY	TOLERANCES ARE X. ± .X ± .XX ± .XXX ± ANG	DESCRIPTION:				
FILE NO.	DRAWING BY						
UNIT / mm	SCALE 1 : 1	PROJECTION	AREA	REVISIONS		DATE	