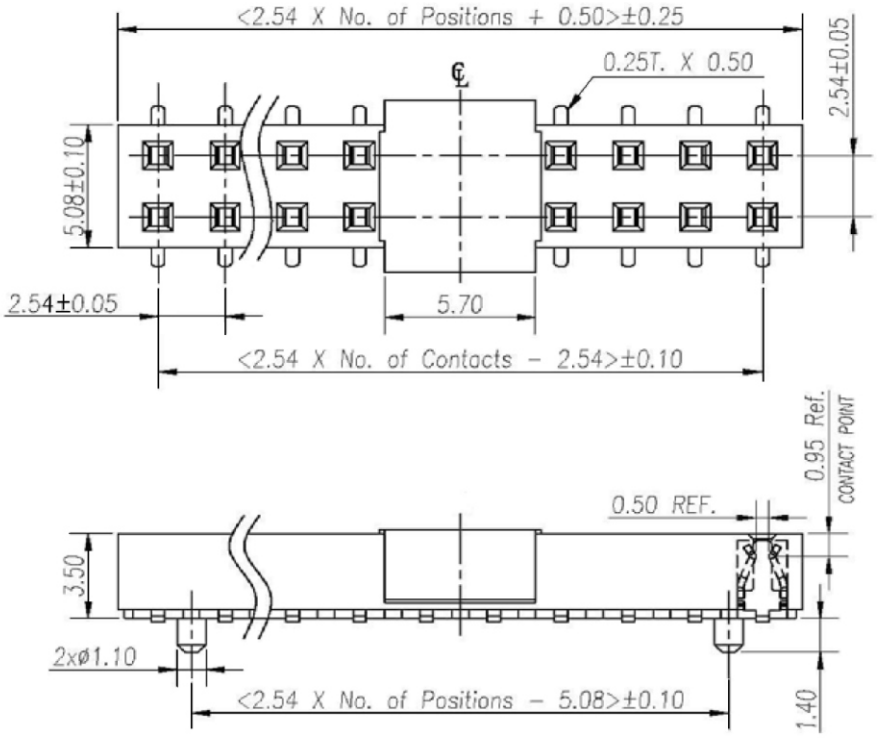

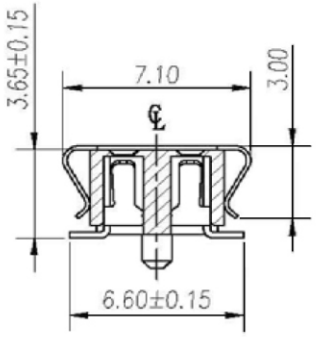

NOTES:

1. UNLESS OTHERWISE SPECIFIED,ALL TOLERANCES FOLLOW DRAWING COMMON STANDARD.
2. MATERIAL:
   - HOUSING: NYLON6T(T5)+30%G.F. FLAMMABILITY UL-94-2 OR OTHER HIGH LEVEL PLASTIC, COLOR:BLACK.
   - Contact: Phosphor Bronze
   - Cap: Steel
3. MBURRS NOT TO EXCEED 0.05mm.

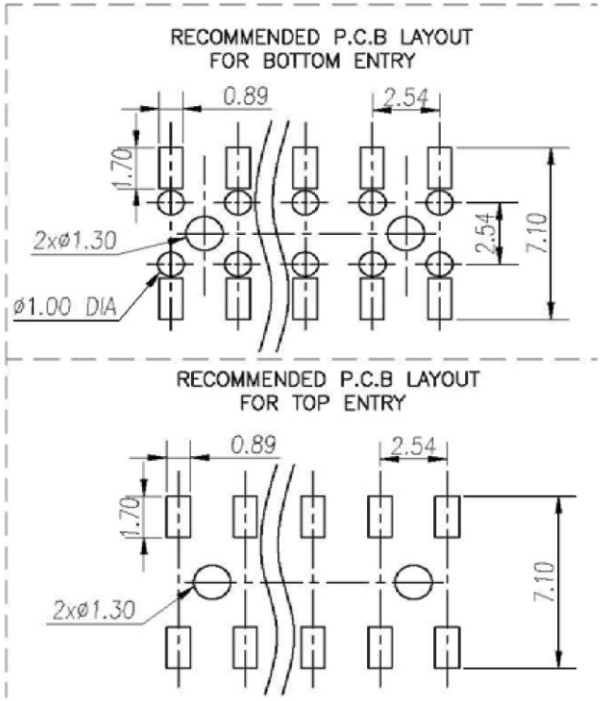

F-Z37PC-2Xxx-LF

LEADFREE

RoHS Compliant

MORETHANALL CONNECTORS ASSEMBLIES	PART NO. **F-Z37PC-2Xxx**						
	DWG NO. **F-Z37PC-2Xxx**	CHECKED BY CY	TOLERANCES ARE .X ± 0.2 .XX ± .XXX ± AWG	DESCRIP TION:			
煜倫股份有限公司	FILE NO.	DRAWING BY					
	UNIT / mm	SCALE 1 : 1	PROJECTION	AREA	REVISIONS	HK	DATE