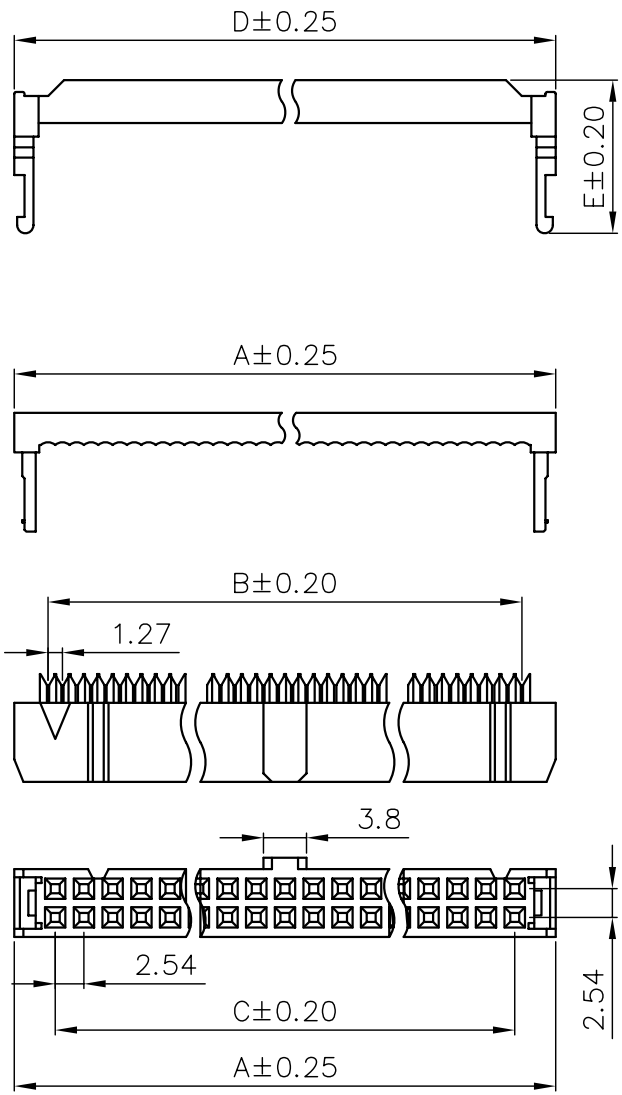

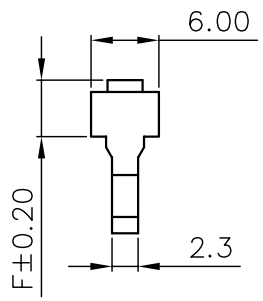

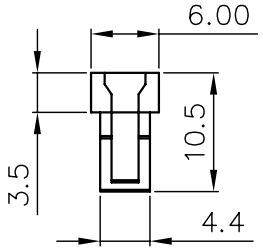

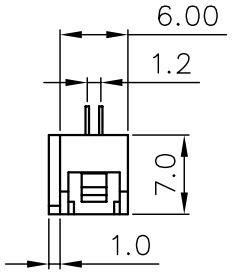

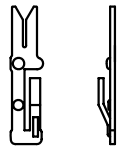

CONTACT

Material:
Insulator: PBT+30% Glass Fiber (UL94V-0).
Contact : Phosphor Bronze or Brass
Contact Plated: Gold or Tin over Nickel Plated.
Specification:
Current Rating: 1 Amp.
Withstanding Voltage: AC 500V for 1 Minute.
Insulation Resistance: 1000MΩ Min. at DC 500V.
Contact Resistance: 15mΩ Max..
Operating Temperature: −40°C ~ +105°C.

F-C3-xx-LF
LEADFREE

RoHS Compliant

Pos.	Dim. A	Dim. B	Dim. C	Dim. D	Dim. E	Dim. F
6	12.32	6.35	5.08	12.12	13.55	5.00
8	14.86	8.89	7.62	14.66	13.55	5.00
10	17.40	11.43	10.16	17.20	13.55	5.00
12	19.94	13.97	12.70	19.74	13.55	5.00
14	22.48	16.51	15.24	22.28	13.55	5.00
16	25.02	19.05	17.78	24.82	13.55	5.00
18	27.56	21.59	20.32	27.36	13.55	5.00
20	30.10	24.13	22.86	29.90	13.55	5.00
24	35.18	29.21	27.94	34.98	13.55	5.00
26	37.72	31.75	30.48	37.52	13.55	5.00
30	42.80	36.83	35.56	42.80	13.55	5.00
34	47.88	41.91	40.64	47.68	13.55	5.00
36	50.42	44.45	43.18	50.22	13.55	5.00
40	55.50	49.53	48.26	55.30	13.55	5.00
44	60.58	54.61	53.34	60.38	13.55	5.00
50	68.20	62.23	60.96	68.40	13.55	5.00
60	80.90	74.93	73.66	80.70	13.55	5.00
64	85.98	80.01	78.74	85.78	13.55	5.00

MORETHANALL CONNECTORS ASSEMBLIES
煜倫股份有限公司

PART NO. F-C3-xx			
DWG NO. F-C3-xx	CHECKED BY CY	TOLERANCES ARE .X ± 0.2 .XX ± 0.1 .XXX ± AWG	DESCRIP TION: 2.54mm IDC Connector Single Contact/with Nose Type
FILE NO.	DRAWING BY		AREA / REVISIONS / HK / DATE
UNIT / mm / SCALE 1 : 1	PROJECTION		