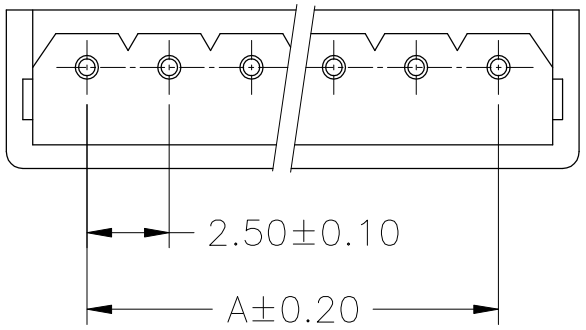

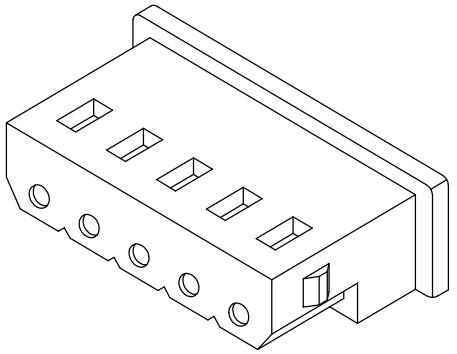

SPECIFICATIONS
Current Rating: 3A AC,DC
Voltage Rating: 250V AC,DC
Temperature Range: −25°C ~ +85°C
Contact Resistance: 20mΩ Max
Insulation Resistance: 1000MΩ Min
Withstanding Voltage: 800V AC/minute
Material: Nylon 66,UL94V−0

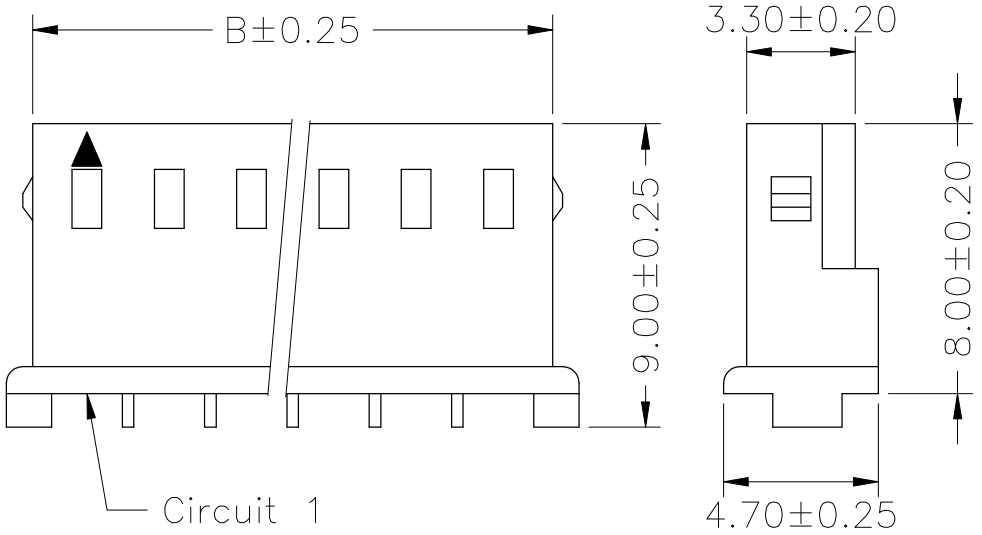

Ordering Information & Dimensions

PART NO.	Dimensions	
	A	B
MW-H-02	2.50	5.80
MW-H-03	5.00	8.30
MW-H-04	7.50	10.80
MW-H-05	10.00	13.30
MW-H-06	12.50	15.80
MW-H-07	15.00	18.30
MW-H-08	17.50	20.80
MW-H-09	20.00	23.30
MW-H-10	22.50	25.80
MW-H-11	25.00	28.30
MW-H-12	27.50	30.80
MW-H-13	30.00	33.30
MW-H-14	32.50	35.80
MW-H-15	35.00	38.30
MW-H-16	37.50	40.80

MORETHANALL CONNECTORS ASSEMBLIES
煜倫股份有限公司

PART NO. **MW-H-xx**			
DWG NO. **MW-H-xx**	CHECKED BY CY	TOLERANCES ARE .X ± 0.2 .XX ± .XXX ± AWG	DESCRIP TION: 2.50mm PITCH HOUSING
FILE NO.	DRAWING BY		
UNIT / mm SCALE 1 : 1	PROJECTION		AREA / REVISIONS / HK / DATE