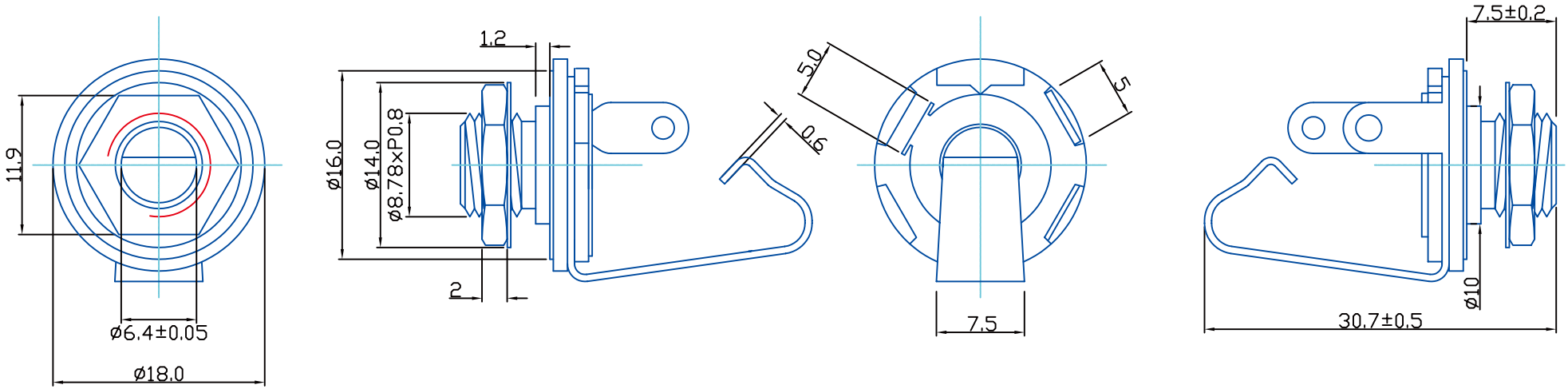

RoHS Compliant

MORETHANALL
PCB CONNECTORS
Cable ASSEMBLIES
煜倫股份有限公司
www.morethanall.com

DRAWING BY CY		TOLERANCES ARE
CHECKED BY GENIUS		X. ± .X ± 0.20 .XX ± 0.10 .XXX ± ANG ±
UNIT / mm	SCALE 1 : 1	
DATE		
SIZE A4	PPOJECTION	

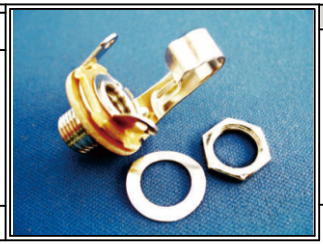

ORDER INFORMATION

HJ-SPBNW-02B-LF

- SERIES
- SOLDER
- PANEL
- BACK
- NUT
- WASHER
- 02WAY
- OPEN TYPE
- LEADFREE

DESCRIPTION: