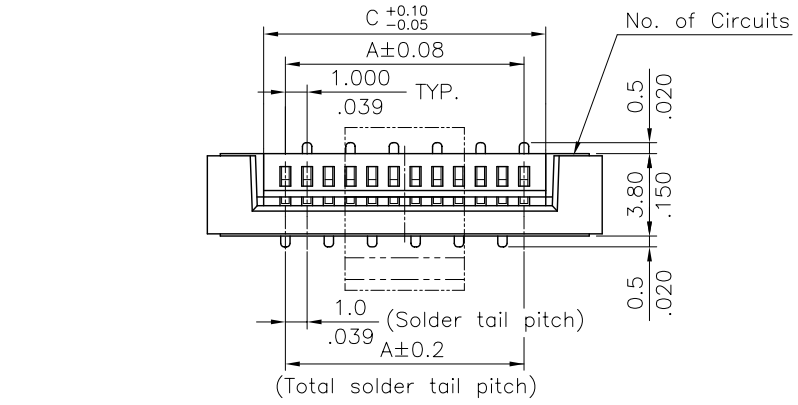

Material:

* Insulation: Nylon 6T UL 94V−0
  Color Nature
* Slider: Nylon 6T UL 94V−0, Color Brown
* Contact: Phosphor Bronze
* PAD: Nylon 6T UL 94V−0, Color Nature

A = 1.00 * No. of Spaces
B = A + 7.2
C = A + 2.1
* Available in 4 through 32 circuits

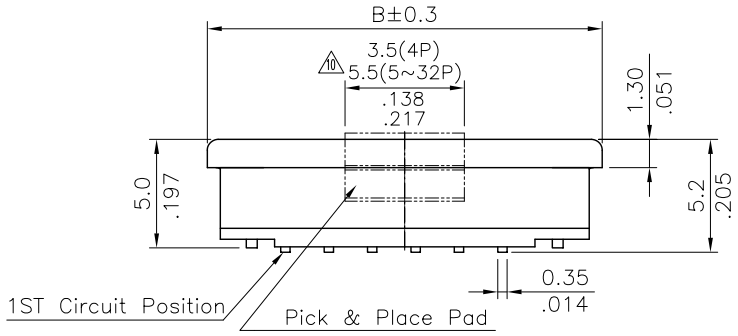

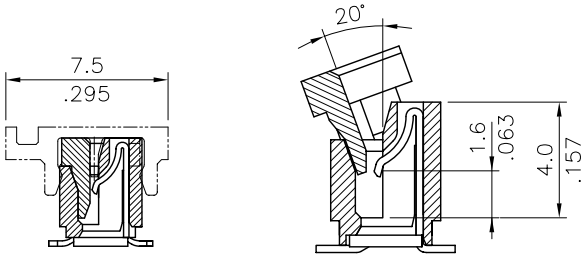

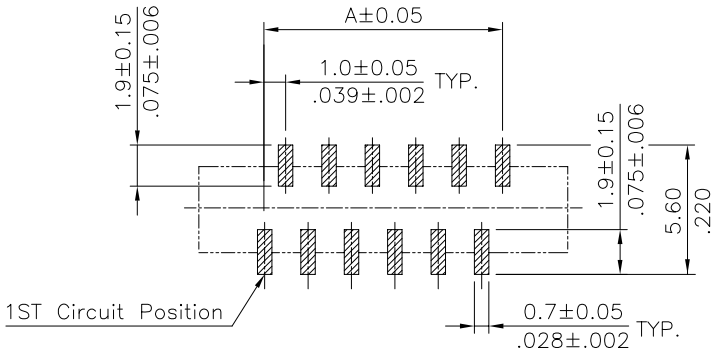

Recommended P.C. Board Layout

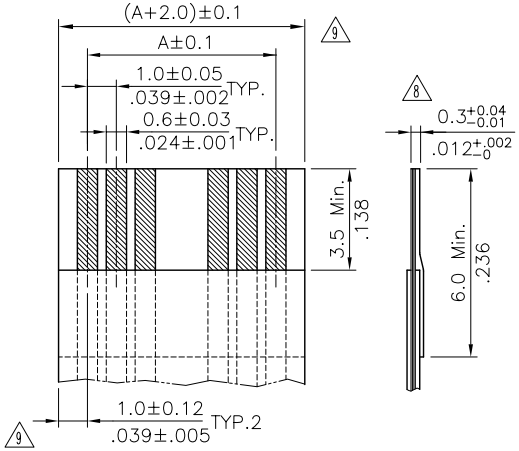

* ACCOMMODATED FFC

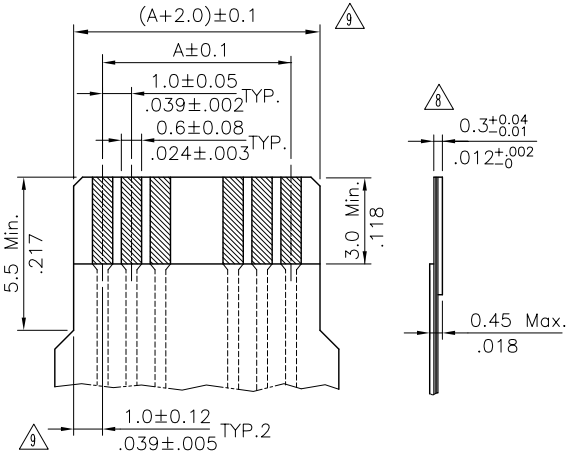

* ACCOMMODATED FPC

RoHS Compliant

MORETHANALL
PCB CONNECTORS
Cable ASSEMBLIES
煜倫股份有限公司
www.morethanall.com

DRAWING BY CY		TOLERANCES ARE
CHECKED BY GENIUS		X. ±
UNIT / mm	SCALE 1 : 1	.X ±
		.XX ±
DATE		.XXX ±
		ANG ±
SIZE A4	PPOJECTION	

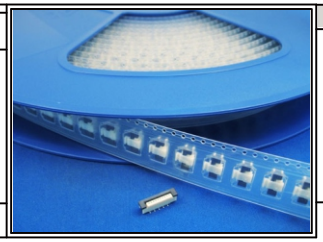

ORDER INFORMATION

FPA-VZAL52CR-xx-LF

SERIES
180°SMT
ZIF
L TYPE FOOT POSITION
SINGLE CONTACT
HIGH 5.2mm
CAP
REEL
04~32WAY
LEAD FREE

DESCRIPTION:

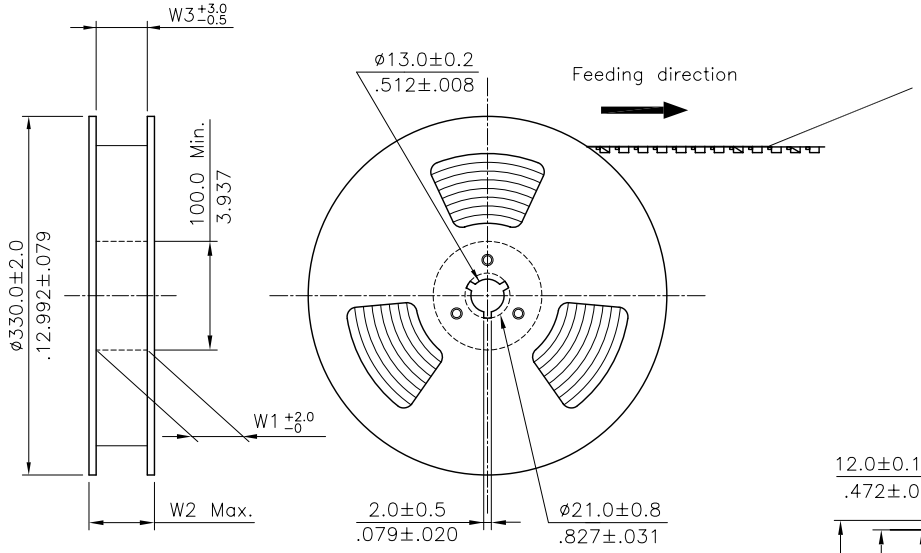

NOTE :

* Reel Material : HIPS
* Carrier Material : Clear, Conductive Polystyrene Alloy
* Cover Tape Material : Polyester
* Cover Tape Peel Strength : 0.1N – 1.3N
* Carrier camber is within 1mm in 250mm
* All dimensions meet EIA–481–B requirements.
* Quantity : 800 PCS/Reel

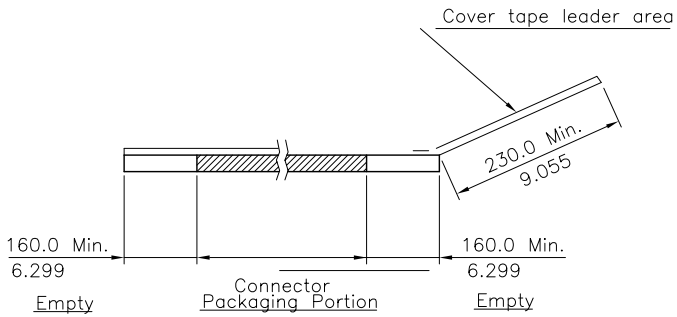

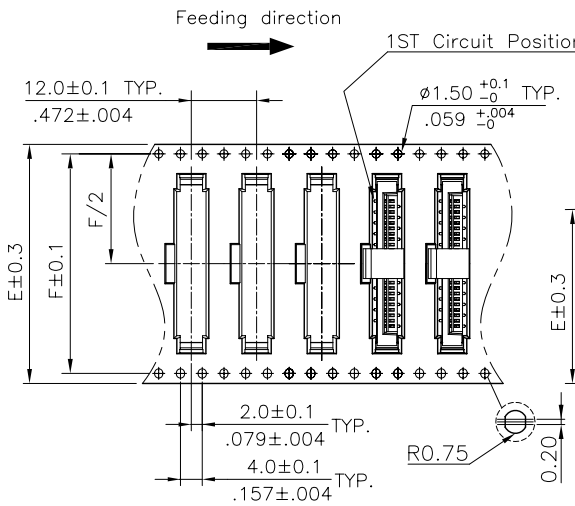

WIDTH : 32, 44 & 56 mm Carrier

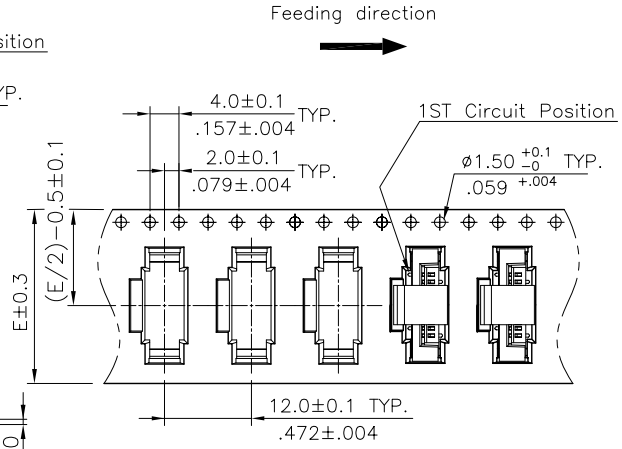

WIDTH : 24 mm Carrier

Circuits	Dimension					Packing (Reel/Caton)
	E	F	W1	W2	W3	
5~10	24.0(.945)	–	24.5(.965)	30.5(1.201)	24.5(.965)	9
11~15	32.0(1.260)	28.40(1.118)	32.5(1.280)	38.5(1.516)	32.5(1.280)	7
16~26	44.0(1.732)	40.40(1.591)	44.5(1.752)	50.5(1.988)	44.5(1.752)	5
27~32	56.0(2.205)	52.40(2.063)	56.5(2.224)	62.5(2.461)	56.5(2.224)	3

RoHS Compliant

MORETHANALL PCB CONNECTORS Cable ASSEMBLIES

煜倫股份有限公司

www.morethanall.com

DRAWING BY CY		TOLERANCES ARE
CHECKED BY GENIUS		X. ±
UNIT / mm	SCALE 1 : 1	.X ±
		.XX ±
DATE		.XXX ±
		ANG ±
SIZE A4	PPOJECTION	

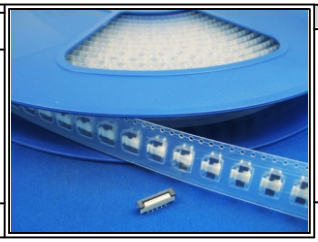

ORDER INFORMATION

FPA-VZAL52CR-xx-LF

SERIES
180°SMT
ZIF
L TYPE FOOT POSITION
SINGLE CONTACT
HIGH 5.2mm
CAP
REEL
04~32WAY
LEAD FREE

DESCRIPTION: