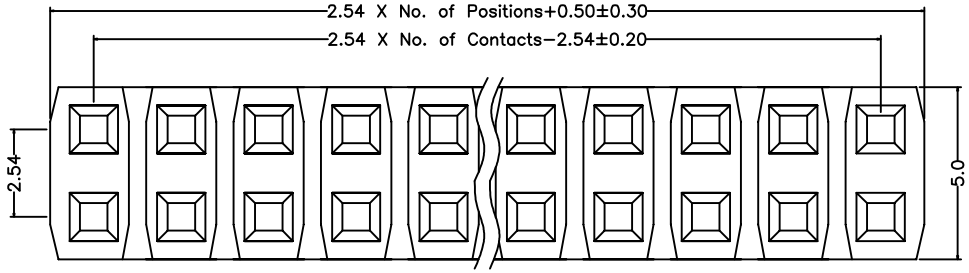

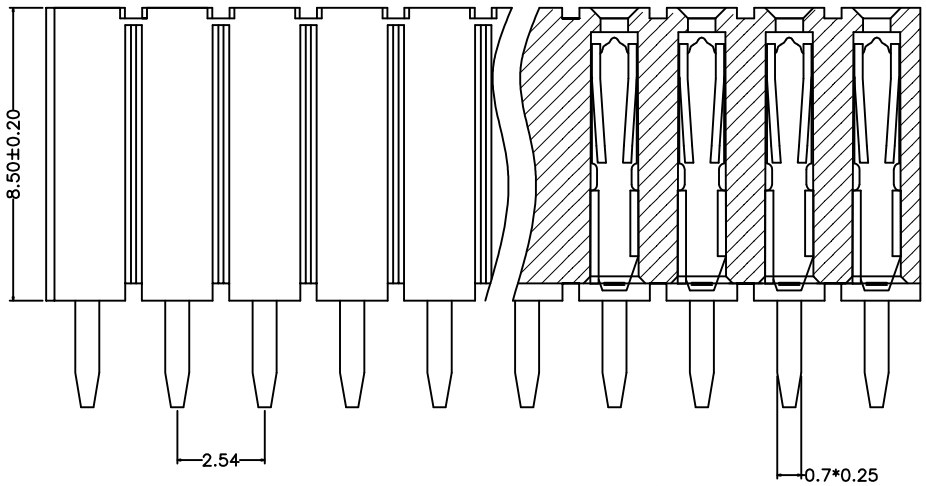

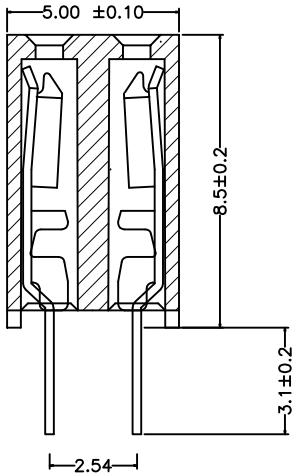

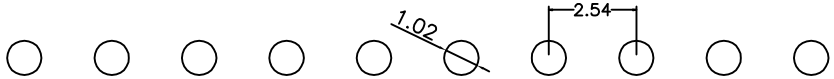

P.C.B LAYOUT

Technical Data

Material:
Contact Material: Brass (C2680)
Contact plating:Au or Sn Over 50μ" Ni
Insulator Material:Polyester UL94V-0
PBT +30%G.F

Electrical:
Current rating:3.0Amps/contact max.
Contact resistance: ≤20mΩ/contact
Insulation resistance: ⩾1000MΩ at V=100V
Withstanding Voltage:1000V AC/minute

Mechanical:
Operaing temperatures:
Gold Plated:-55°C to+105°C
Tin plated:-40°C to+105°C
Soldering temperature: +220°C, 10s max

RoHS Compliant

MORETHANALL PCB CONNECTORS Cable ASSEMBLIES
煜倫股份有限公司
www.morethanall.com

DRAWING BY CY		TOLERANCES ARE
CHECKED BY GENIUS		X. ±
UNIT / mm	SCALE 1 : 1	.X ±
		.XX ±
DATE		.XXX ±
		ANG ±
SIZE A4	PPOJECTION	

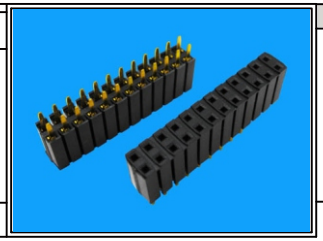

ORDER INFORMATION

F-D85B-2Xxx-LF

SERIES
DIP 180°
HIGH 8.5mm
BREAKAWAY
2X02:04WAY
2X40:80WAY
LEADFREE

DESCRIPTION: 2.54mm雙排排母-U型PIN 180度 針長11.5mm