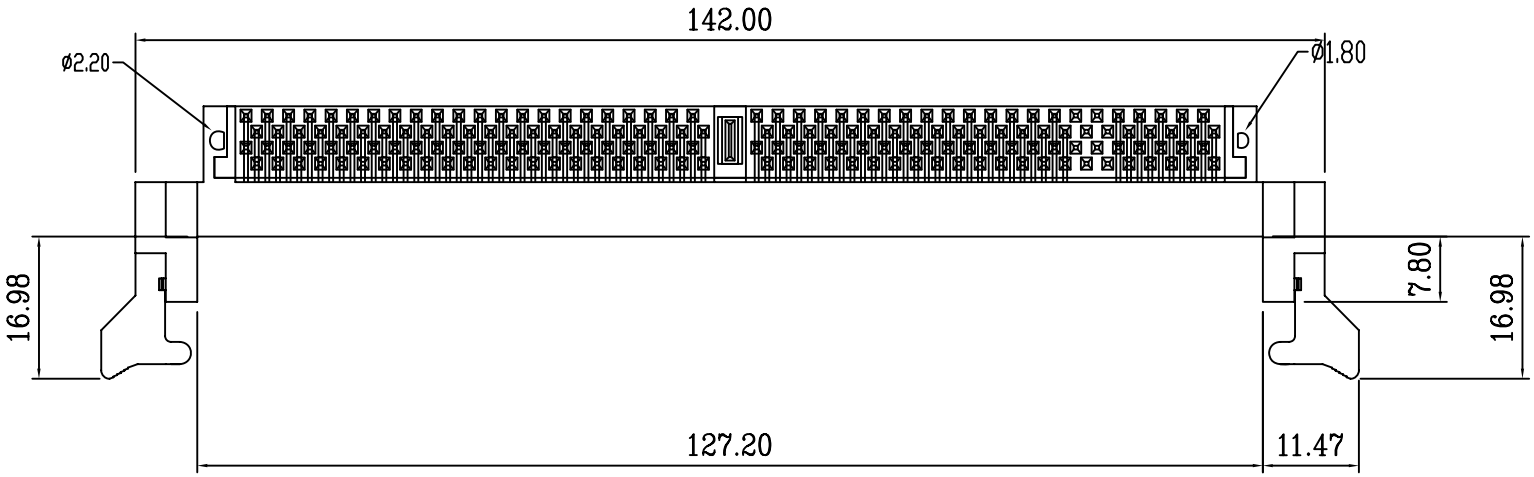

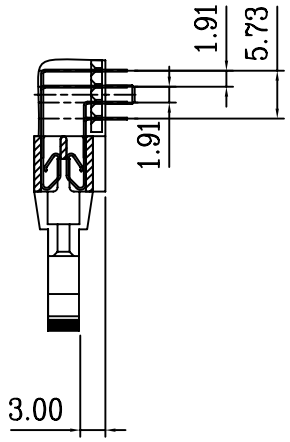

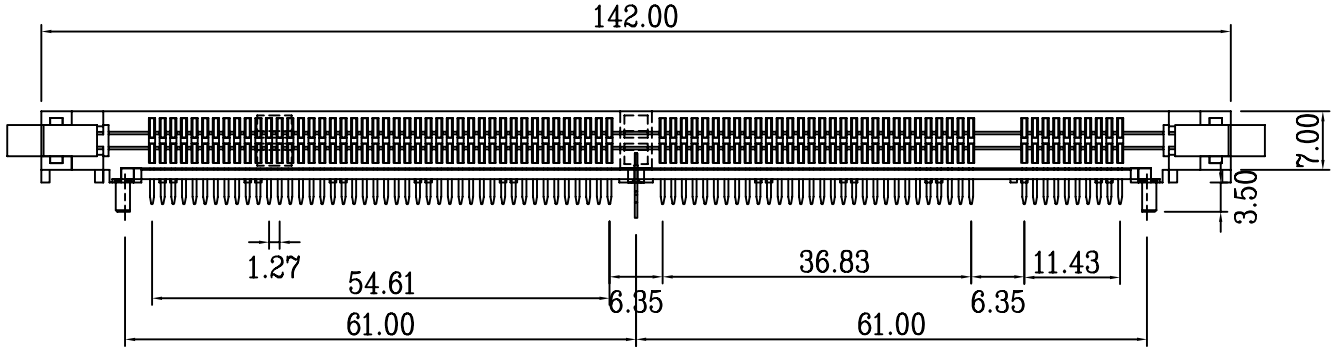

DIM-R-168-LF

LEADFREE

RoHS Compliant

MORETHANALL CONNECTORS ASSEMBLIES

煜倫股份有限公司

PART NO. DIM-R-168			
DWG NO. DIM-R-168	CHECKED BY CY	TOLERANCES ARE .X ± 0.15 .XX ± 0.10 .XXX ± 0.05 AWG	DESCRIP TION: Dimm Socket 168P 90°
FILE NO.	DRAWING BY		
UNIT / mm SCALE 1 : 1	PROJECTION		AREA / REVISIONS / HK / DATE