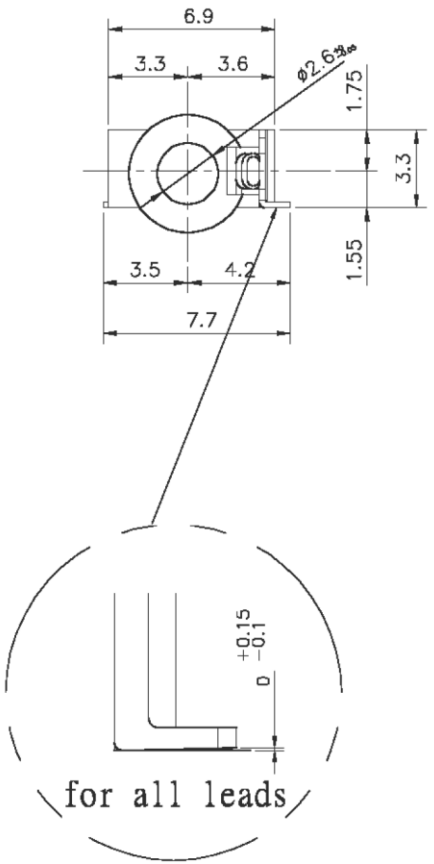

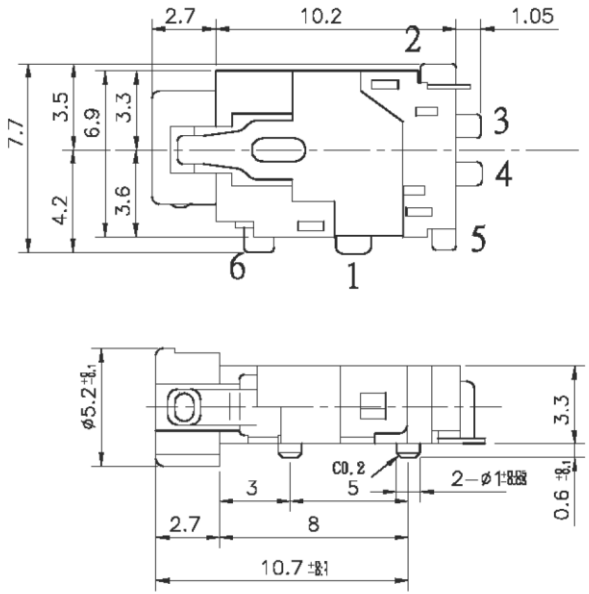

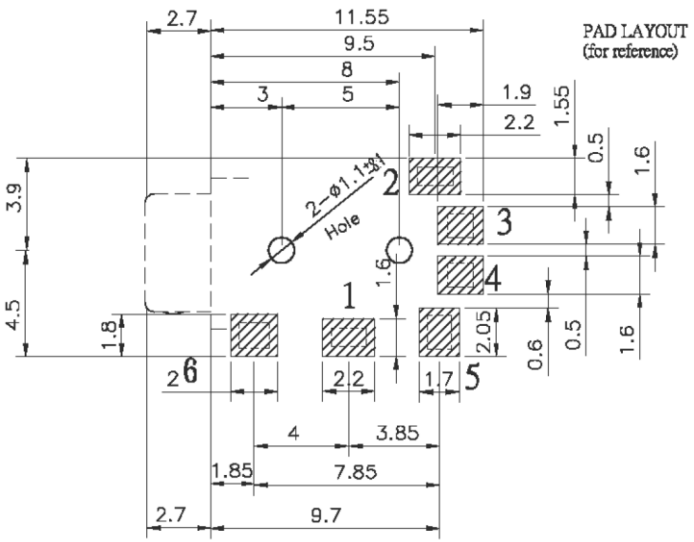

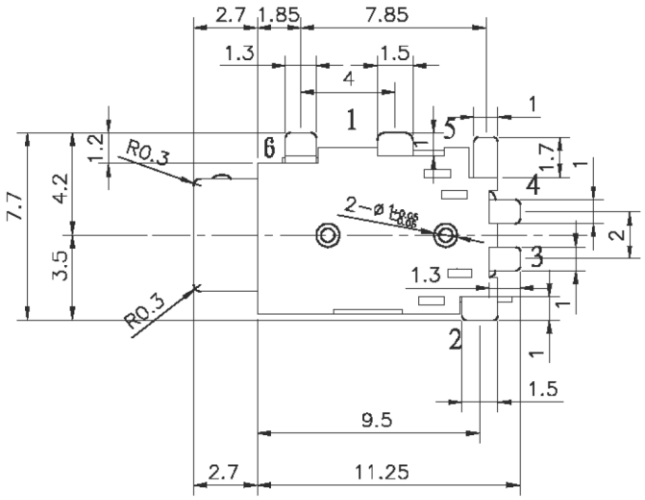

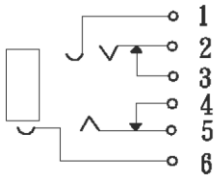

#	PART NAME	QTY	MATERIAL	PLATING	REMARKS
	BODY	1	NYLON		BLACK(UL94V-0)
2	MAIN TERMINAL A	1	*CTR-M 0.3t	Ag	(TIP CONTACT)
5	MAIN TERMINAL B	1	PBSR-H 0.2t	Ag	(RING CONTACT)
3	FIX TERMINAL A	1	BsR2-H 0.25t	Ag	
4	FIX TERMINAL B	1	BsR2-H 0.25t	Ag	
1	EARTH TERMINAL	1	PBSR-H 0.2t	Sn	(SLEEVE CONTACT)
6	OUTER RING T.		PBSR-H 0.2t	Au	(OUTER RING C.)

*or BeCuR-M 0.3t

RoHS Compliant

MORETHANALL
PCB CONNECTORS
Cable ASSEMBLIES
煜倫股份有限公司
www.morethanall.com

DRAWING BY CY		TOLERANCES ARE
CHECKED BY GENIUS		X. ±
UNIT / mm	SCALE 1 : 1	.X ±
		.XX ±
DATE		.XXX ±
		ANG ±
SIZE A4	PPOJECTION	

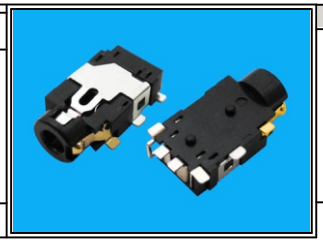

ORDER INFORMATION

EJ-W35U-06DS-LF

SERIES
6P4C
LEADFREE
POST 3+5mm
90°SMT

DESCRIPTION: